REVOX

# Revox B250–S

## Serviceanleitung
## Service Instructions
## Instructions de service

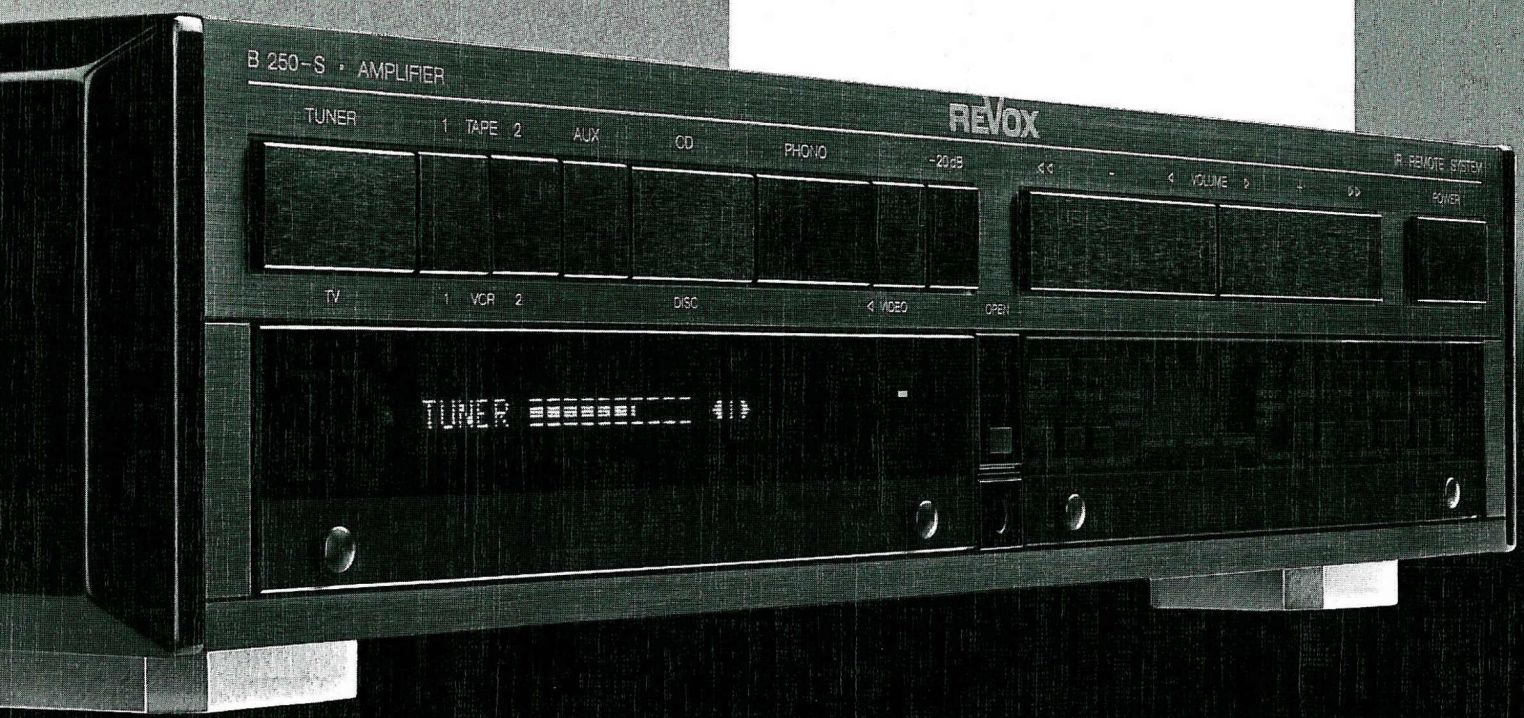

# REVOX B250/B250-S/B150 AMPLIFIERS


| | | |
|---|---|---|
| DEUTSCH | 1 Allgemeines | D 1/1 |
| | 2 Ausbau | D 2/1 |
| | 3 Funktionsbeschreibung | D 3/1 |
| | 4 Abgleichanleitung | D 4/1 |
| ENGLISH | 1 General | E 1/1 |
| | 2 Disassembly Instructions | E 2/1 |
| | 3 Functional Description | E 3/1 |
| | 4 Alignment Instructions | E 4/1 |
| FRANÇAIS | 1 Généralités | F 1/1 |
| | 2 Procédé de démontage | F 2/1 |
| | 3 Descriptions du fonctionnement | F 3/1 |
| | 4 Instructions de réglage | F 4/1 |
| | Schemata und Positionslisten | 5/1 |
| | 5 Diagrams and Positions Lists | 5/1 |
| | Schémas et listes des positions | 5/1 |
| | Mechanische Ersatzteile | 6/1 |
| | 6 Mechanical Spare parts | 6/1 |
| | Pieces de rechange mécanique | 6/1 |
| | Technische Daten | 7/1 |
| | 7 Technical specifications | 7/1 |
| | Caractéristiques techniques | 7/1 |


**H i n w e i s :** Für die beim **B150** fehlenden Bauteile und Schaltkreise entfallen die entsprechenden Erklärungen und Einstellungen.

**N o t e :** For operating elements and circuits missing on **B150** the corresponding explanations and aligning instructions can be skipped.

**R e m a r q u e :** Pour les éléments de commande et les circuits manquants sur les **B150** les explications et l'instruction d'alignement sont supprimés.

## Behandlung von MOS-Bauteilen

MOS-Bausteine sind besonders empfindlich auf elektostatische Ladungen.
Folgendes ist daher zu beachten:

- Elektostatisch empfindliche Bauteile werden in Schutzverpackungen gelagert und transportiert.
- Jeder Kontakt der Elementanschlüsse mit elektrostatisch aufladbaren Materialen ist unbedingt zu vermeiden.
- Anschlüsse dürfen nur berührt werden, wenn das Handgelenk geerdet ist.
- Als Arbeitsunterlage ist eine geerdete, leitende Matte zu verwenden.
- Printkarten nicht unter Spannung herausziehen oder einstecken.

## Handling MOS components

MOS components are extremely sensitive to static charges.
Please observe therefore the following regulations:

- Components sensitive to static charges are stored and shipped in protective packagings. On the package you find the above-mentioned symbol.
- Avoid any contact of connector pins with foam packages and -foil made of similar chargeable package material.
- Don't touch the connector pins, when your wrist is not grounded with conducting wristlet.
- Use a grounded conducting mat when working with sensitive components.
- Never plug or unplug PCBs containing sensitive components when the set is swiched on.

## Manipulation des composantes MOS

Les composantes MOS sont extr@mement sensibles à l'electricité statique.
Veuillez donc suivre les conseils:

- Les composantes MOS sont stockés et transportés dans des emballages protecteurs avec le symbole susmentionné.
- Evitez tout contact entre les broches des circuits et matériaux susceptible de porter une charge électrostatique.
- Ne touchez pas les broches des circuits si votre poignet n'est pas relié à la terre par bracelet conducteur.
- Utilisez un tapis conducteur relié à la terre quand vous travaillez avec des composants sensibles.
- Ne jamais enficher ou retirer des circuits imprimés si l'appareil est sous tension.

Prepared and edited by
STUDER REVOX
TECHNICAL DOCUMENTATION
Althardstrasse 10
CH-8105 Regensdorf-Zurich
Switzerland

We reserve the right to make alterations

Copyright by WILLI STUDER AG
Printed in Switzerland

Order No. 10.30.0860 (Ed.1289)

REVOX is a registered trade mark of WILLI STUDER AG Regensdorf.
STUDER is a registered trade mark of STUDER INTERNATIONAL AG Regensdorf.

D E U T S C H

Inhalt Seite


Behandlung von MOS Bauteilen

1. BEDIENUNGSELEMENTE UND ANSCHLÜSSE

1.1 FRONT

1.2 RÜCKSEITE

2. AUSBAU

2.1. ALLGEMEINES
2.1.1 Hinweise
2.1.2 Verwendete Werkzeuge

2.2 ENTFERNEN DER ABDECKUNGEN
2.2.1 Obere Abdeckung
2.2.2 Seitliche Abdeckungen

2.3 SICHERUNGEN

2.4 CHASSIS ZERLEGEN
2.4.1 Netztrafo
2.4.2 POWER SUPPLY BOARD
2.4.3 POWER AMPLIFIER BOARD
2.4.4 PREAMPLIFIER BOARD
2.4.5 PHONO UNIT MM
2.4.6 PHONO UNIT MM+MC CONVERSION KIT
2.4.7 INPUT/OUTPUT UNIT

2.5 FRONTTEIL ZERLEGEN
2.5.1 Bestandteile des Frontteils
2.5.2 Ausbau des Frontteils
2.5.3 Microcomputer Board
2.5.4 Tasten
2.5.5 Glasscheiben
2.5.6 Bedienungschassis
2.5.7 Klappenmechanismus

3. SCHALTUNGSBESCHREIBUNG

3.1 AUDIO
3.2 MICROCOMPUTER-SYSTEM
3.3 MAINS TRAFO UND VOLTAGE REGULATION

4. ELEKTRISCHE MESSUNG UND EINSTELLUNGEN

4.1 MESSGERÄTE UND HILFSMITTEL
4.2 VORBEREITUNGEN
4.3 BETRIEBSSPANNUNGEN
4.4 RUHESTROM
4.5 HELLIGKEITSSTEUERUNG VF-DISPLAY

5. SCHEMASAMMLUNG

6. MECHANISCHE ERSATZTEILE

7. TECHNISCHE DATEN

# 1. BEDIENUNGSELEMENTE UND ANSCHLÜSSE

## 1.1 FRONT

| | | |
|---|---|---|
| | »» | Mit REVOX IR - FERNBEDIENUNG B208 steuerbare Funktion. |

| [X] | BEDIENUNGSELEMENT | | Funktion |
|---|---|---|---|
| [1] | POWER | »» | Ein-/Ausschalter. Der Verstärker wird im zuletzt gewählten Betriebs-Modus eingeschaltet. Ein weiteres Drücken schaltet den Verstärker wieder aus (Standby). |
| [2] | VOLUME + | »» | Lautstärke erhöhen. Mit > in 1 dB-Schritten und mit >> in 3 dB-Schritten.<br>Beim Programmieren: Pegel erhöhen. |
| [3] | VOLUME - | »» | Lautstärke absenken. Mit < in 1 dB-Schritten und mit << in 3 dB-Schritten.<br>Beim Programmieren: Pegel absenken. |
| [4] | OPEN | | öffnet die Abdeck-Klappe zum zweiten Tastenfeld und beinhaltet den IR-Empfänger. Die Klappe kann zum Schliessen einfach hochgehoben werden. |
| [5] | -20 dB | »» | Jedes Drücken dieser Taste senkt das Volumen um 20 dB ab. Rückstellen mit VOLUME + [2]. |
| [6] | VIDEO | | Nur in Verbindung mit der Quellen-Erweiterung REVOX B200-Controller aktiv. Ermöglicht das Anwählen zusätzlicher Signalquellen wie TV, VCR 1/2 und DISC. |
| [7] | PHONO | »» | Signalquellen-Wahltaste für Plattenspieler. |
| [8] | CD | »» | Signalquellen-Wahltaste für CD-Spieler. |
| [9] | AUX | »» | Signalquellen-Wahltaste für den Reserve-Eingang. |
| [10] | TAPE 2 | »» | Signalquellen-Wahltaste für Tonbandgerät 2. |
| [11] | TAPE 1 | »» | Signalquellen-Wahltaste für Tonbandgerät 1. |
| [12] | TUNER | »» | Signalquellen-Wahltaste für Tuner. |
| [13] | PRE-OUT LED | »» | Signalisiert den eingeschalteten Vorverstärker-Ausgang PRE-OUT. |
| [14] | REMOTE LED | | Signalisiert den Empfang von IR-Fernsteuer-Signalen. |
| [15] | Display | | 20-stelliges Vacuum-Fluoreszenz-Display. Zeigt den Betriebs-Zustand des Gerätes. |
| [16] | SPEAKERS B LED | | Signalisiert den eingeschalteten Lautsprecher-Ausgang SPEAKERS B. |
| [17] | SPEAKERS A LED | | Signalisiert den eingeschalteten Lautsprecher-Ausgang SPEAKERS A. |
| [18] | PHONES | | Anschlussbuchse für Kopfhörer. |
| [19] | REC-OUT | | Die Aufnahmequelle entspricht nicht der gehörten Quelle. Das Display [15] ändert die Anzeigeart z.B. auf: IN:TUNER REC:TAPE 1. |
| [20] | MC | | Wahl des Moving Coil-PHONO-Vorverstärkers bei vorhandener MC-Option, ansonsten inaktiv. |
| [21] | SEPARATED | | Trennen von Vorverstärker und Endverstärker um z.B. einen Equalizer dazwischen zu schalten. |

| | | | |
|---|---|---|---|
| [22] | MAX VOLUME | | Schaltet in den Programmier-Modus für die Eingabe der maximalen Lautstärke (MAX VOLUME) der einzelnen Ausgänge und der Einschalt-Lautstärke (PWR ON-VOLUME). |
| [23] | REC=IN | | Die Aufnahmequelle entspricht der gehörten Quelle. Das Display [15] ändert die Anzeigeart auf: Signalquelle, Lautstärke und Balance-Stellung. |
| [24] | LC-Display | | Multifunktionales Anzeigefeld mit den Anzeigen für: BASS, TREBLE, MAX VOLUME, SENSITIVITY, usw. |
| [25] | BASS - | »» | Verringert den Anteil der tiefen Frequenzen. Beim erstmaligen Drücken wird die aktuelle Einstellung angezeigt. |
| [26] | SENSITIVITY | | Schaltet in den Programmier-Modus für die Eingabe einer Lautstärke-Verschiebung zugunsten eines Ausganges und der Empfindlichkeit (SENSITIVITY) der Signalquellen-Eingänge. |
| [27] | BASS + | »» | Erhöht den Anteil der tiefen Frequenzen. Beim erstmaligen Drücken wird die aktuelle Einstellung angezeigt. |
| [28] | LOUDN | | Schaltet die lautstärkeabhängige Anhebung der tiefen Frequenzen bei geringer Lautstärke (LOUDNESS-Funktion) ein und aus. |
| [29] | TONE | »» | Schaltet den Klangsteller (BASS, TREBLE) ein und aus. |
| [30] | BALANCE L | »» | Verschiebt den Ausgangspegel zum linken Kanal. |
| [31] | TREBLE - | »» | Verringert den Anteil hoher Frequenzen. Beim erstmaligen Drücken wird die aktuelle Einstellung angezeigt. |
| [32] | BALANCE R | »» | Verschiebt den Ausgangspegel zum rechten Kanal. |
| [33] | TREBLE + | »» | Erhöht den Anteil hoher Frequenzen. Beim erstmaligen Drücken wird die aktuelle Einstellung angezeigt. |
| [34] | PRE-OUT | »» | Schaltet den Vorverstärker-Ausgang PRE-AMP ein und aus. |
| [35] | SPEAKERS A | »» | Schaltet die Lautsprechergruppe SPEAKERS A ein und aus. |
| [36] | STORE | | Speichertaste. Schliesst einen Programmiervorgang mit MAX VOLUME oder SENSITIVITY (ausser SENSITIVITY INPUT) ab. Durch Schliessen der Abdeck-Klappe kann ein Programmiervorgang ohne Abspeicherung jederzeit abgebrochen werden. |
| [37] | SPEAKERS B | »» | Schaltet die Lautsprechergruppe SPEAKERS B ein und aus. |

## 1.2 RÜCKSEITE

| | | |
|---|---|---|
| [38] | PHONO MC | Eingangs-Buchsen (CINCH) für einen Plattenspieler mit Moving Coil-Abtastsystem (Option). |
| [39] | | Masse-Anschluss für die Plattenspieler-Erdung. |
| [40] | PHONO MM | Eingangs-Buchsen (CINCH) für einen Plattenspieler mit Moving Magnet-Abtastsystem. |
| [41] | PF | Schalter zur Anpassung der Eingangskapazitä des PHONO MM-Einganges an die Kapazität des Plattenspielers. |
| [42] | CD | Eingangs-Buchsen (CINCH) für einen CD-Spieler. |
| [43] | AUX | Eingangs-Buchsen (CINCH) für eine zusätzliche Signalquelle (Reserve-Eingang). |
| [44] | TAPE 2 | Eingangs-Buchsen (CINCH) für die Wiedergabe ab Tonbandgerät 2. |
| [45] | TAPE 1 | Eingangs-Buchsen (CINCH) für die Wiedergabe ab Tonbandgerät 1. |
| [46] | TUNER | Eingangs-Buchsen (CINCH) für einen Tuner (Empfänger). |
| [47] | PWR-AMP | Eingangs-Buchsen (CINCH) für eine direkte Einspeisung in die Leistungs-Endstufen. |
| [48] | MONITOR | Ausgangs-Buchsen (CINCH) mit festem Pegel für einen zusätzlichen Verstärker. |
| [49] | TAPE 2 | Ausgangs-Buchsen (CINCH) für Aufnahmen mit Tonbandgerät 2. |
| [50] | TAPE 1 | Ausgangs-Buchsen (CINCH) für Aufnahmen mit Tonbandgerät 1. |
| [51] | RECORD | Ausgangs-Buchsen (CINCH) für einen zusätzlichen Aufnahme-Kanal (drittes Tonbandgerät). |
| [52] | SERIAL LINK | Serieller Steueranschluss für den Anschluss eines externen IR-Empfängers REVOX B206 oder des Controllers B200. über diese Buchse kann auch der interne IR-Empfänger ausgeschaltet werden (Pin1 mit Pin2 und Pin4 mit Pin5 verbinden). |
| [53] | PRE-AMP | Ausgangs-Buchsen (CINCH) für den Anschluss von Aktiv-Lautsprecherboxen (Vorverstärker-Ausgang). |
| [54] | SPEAKERS A | Lautsprecher-Klemmen der Lautsprechergruppe A. |
| [55] | SPEAKERS B | Lautsprecher-Klemmen der Lautsprechergruppe B. |
| [56] | AC POWER | Netzanschluss. |

## B150

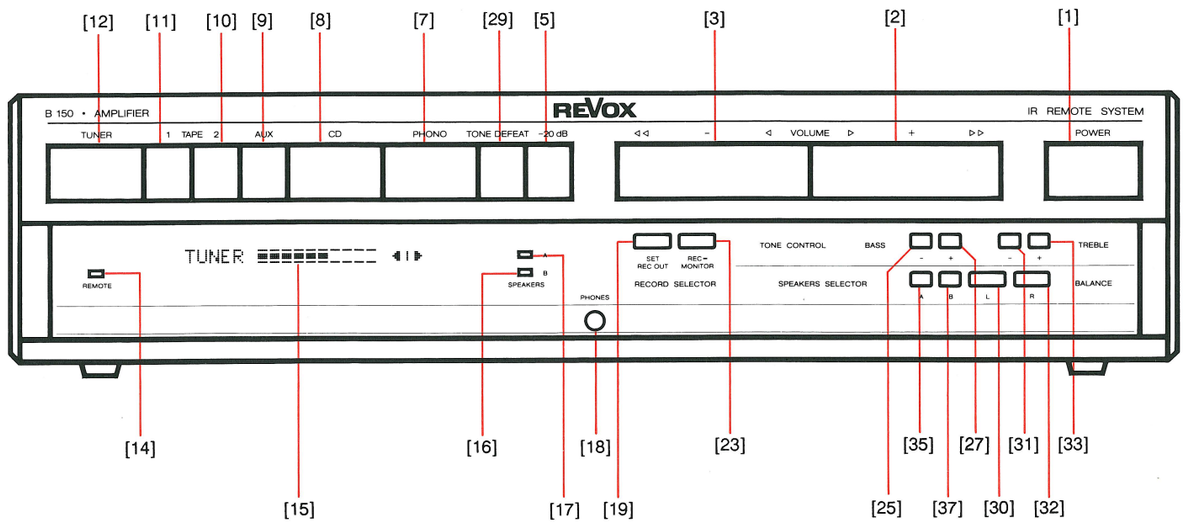


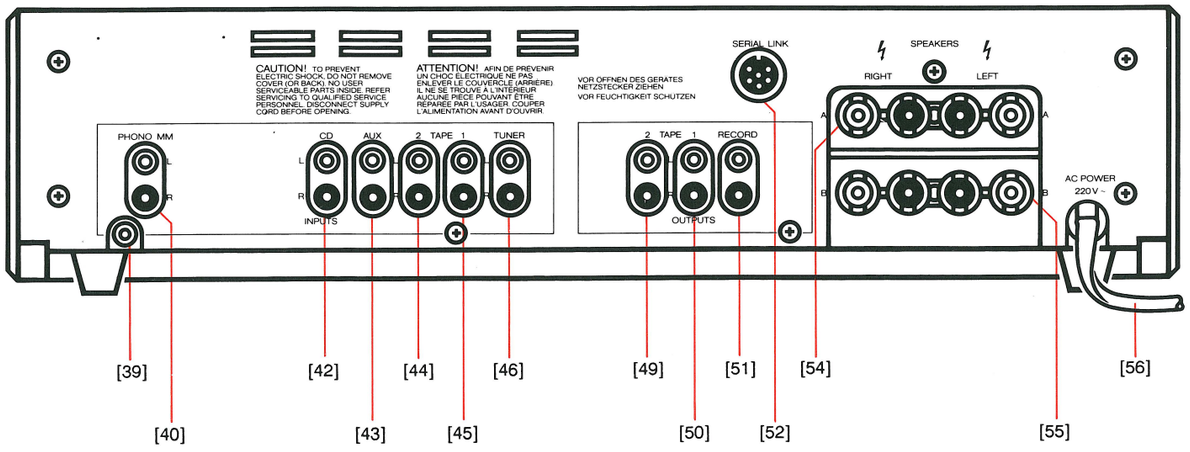


## B250 (B250–S)

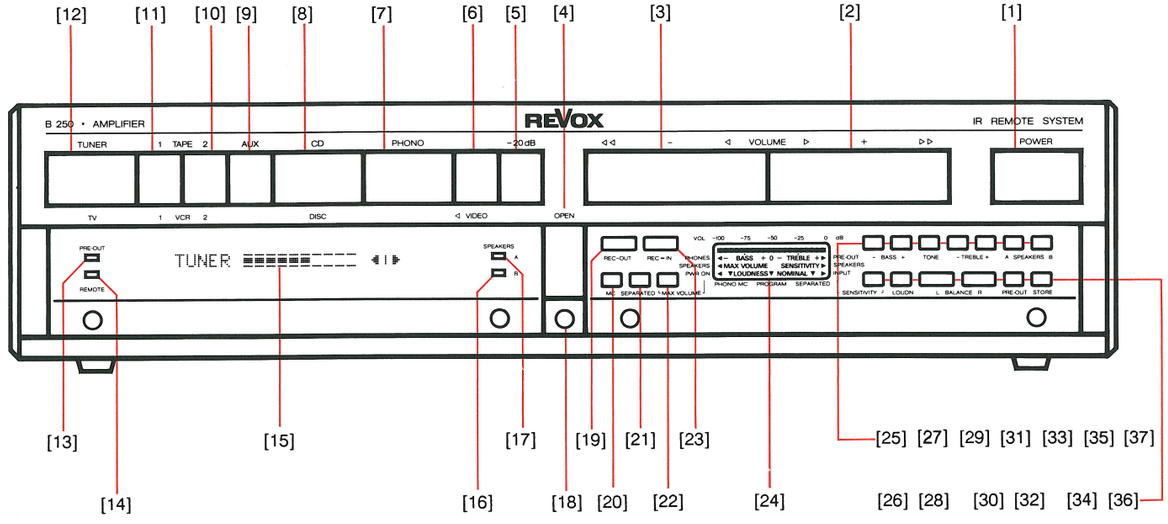


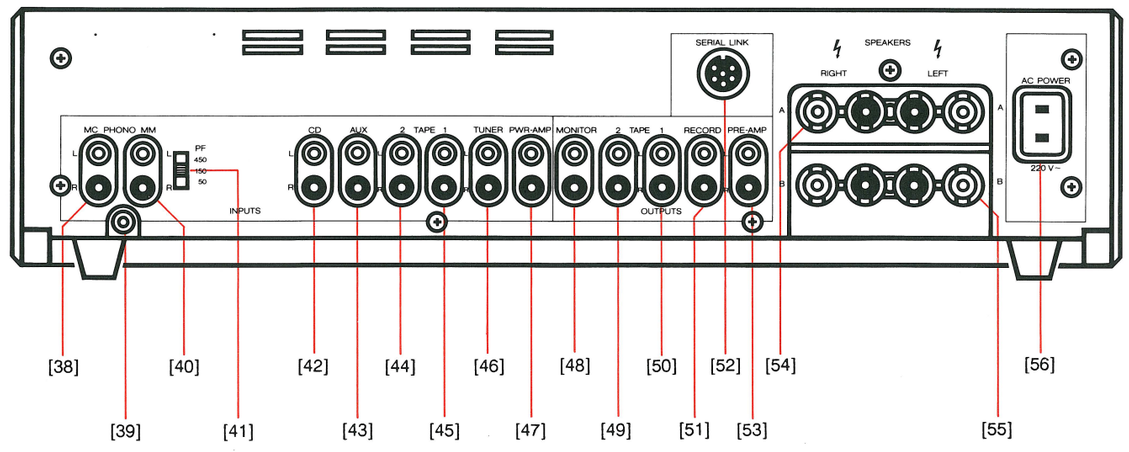

# 2. AUSBAU

## 2.1 ALLGEMEINES

### 2.1.1 Hinweise

**Achtung:**
Vor dem Oeffnen des Gerätes
Netzstecker ziehen !

- Bei Aus- und Einbauarbeiten elektronischer Komponenten sind die eingangs dieser Anleitung erwähnten Richtlinien zur Behandlung von MOS-Bauteilen zu beachten.
- Der Arbeitsplatz soll eine weiche Unterlage bieten, um Kratzspuren an der Frontplatte zu verhindern.

### 2.1.2 Verwendete Werkzeuge

| | | |
|---|---|---|
| 1 | Kreuzschlitz-Schraubendreher | Grösse 0 |
| 1 | Kreuzschlitz-Schraubendreher | Grösse 1 |
| 1 | Kreuzschlitz-Schraubendreher | Grösse 2 |
| 1 | Schraubendreher | Grösse 1 |
| 1 | Schraubendreher | Grösse 2 |
| 1 | "ESE"-Arbeitsplatzausrüstung | Best. Nr. 46200 |

## 2.2 ENTFERNEN DER ABDECKUNGEN

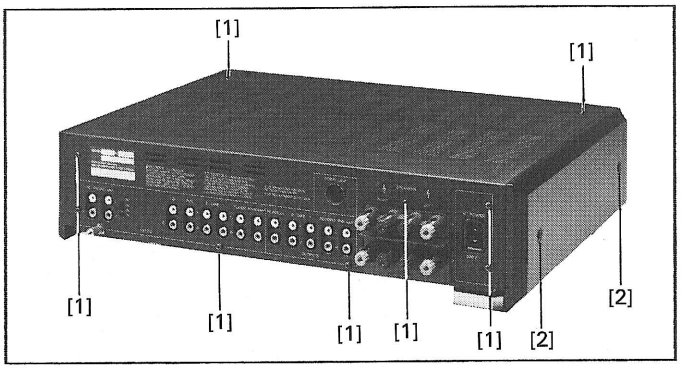


Fig.2.1

### 2.2.1 Obere Abdeckung

- An Ober- bzw. Rückseite 9 Schrauben (1) entfernen (Fig.2.1).
- Die Abdeckung etwas nach hinten schieben und abnehmen.

### 2.2.2 Seitliche Abdeckungen

- Je 2 Schrauben (2) lösen (Fig.2.1).

## 2.3 SICHERUNGEN

- Netzstecker ziehen!
- Die obere Abdeckung wie erwähnt entfernen.
- Die weisse Plastikabdeckung durch Drehbewegung herausnehmen.
- Defekte Sicherungen auswechseln:

**B250, B250-S:**

- **Primär:**
  F6 mit Berührungsschutz
  100...140 V --> T 6,3 A
  200...240 V --> T 3,15A

- **Sekundär:**
  F1, F2, F3 --> T 1 A
  F4 --> T 100mA
  F5 --> T 315mA

**B150:**

- **Primär:**
  F6 mit Berührungsschutz
  110 V --> T 5 A
  220/240 V --> T 2,5A

- **Sekundär:**
  F1 --> T 100mA
  F2, F3, F4, F5 --> T 630mA

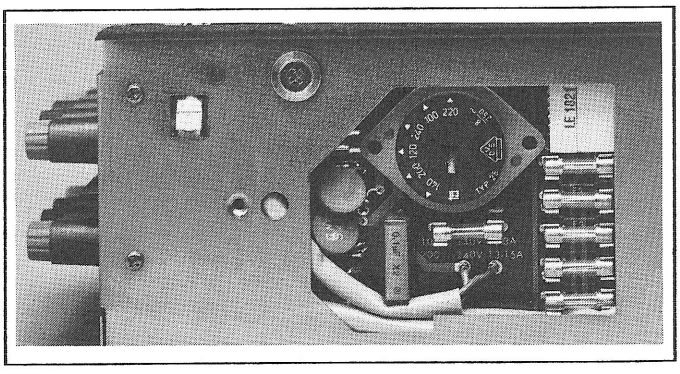

Fig.2.2

## 2.4 CHASSIS ZERLEGEN

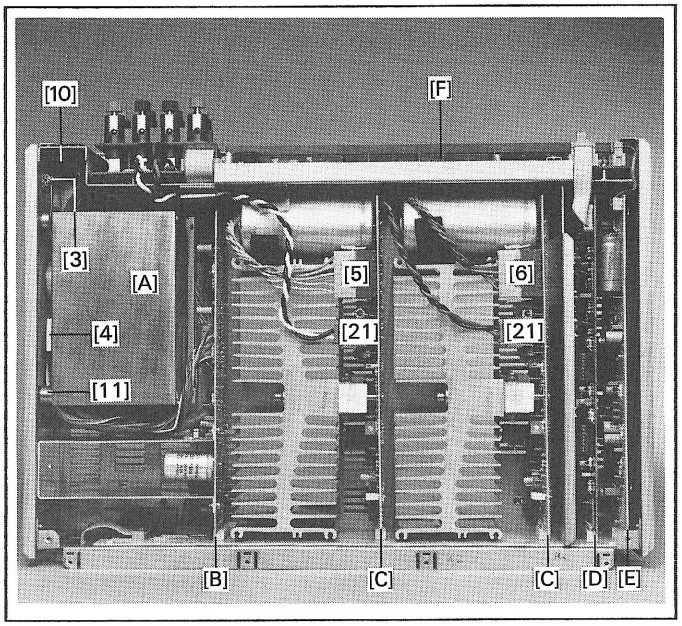


Fig.2.3

A: Netztrafo
B: Power Supply
C: Poweramplifier
D: Preamplifier
E: Phono Unit
F: Input/Output Unit

### 2.4.1 Netztrafo

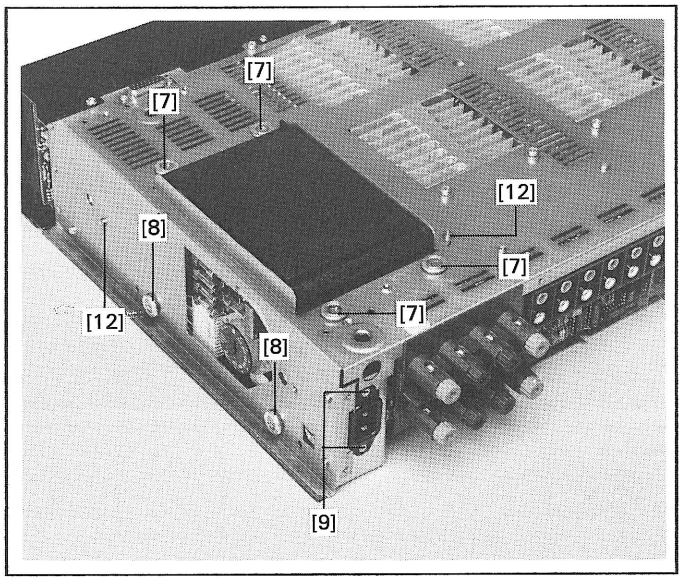


Fig.2.4

- Das Gerät umdrehen und auf die Oberseite legen.
- 4 Schrauben mit Unterlagscheiben (7) auf der Unterseite lösen.
- Das Gerät wieder auf seine Füsse stellen.
- Die beiden Schrauben (9) der Netzbuchse (10) entfernen; die Buchse durch die Oeffnung in das Gerät hineinschieben.
- Die Steckverbindungen (3, 4, 5, 6) lösen.
- Die beiden Schrauben (8) entfernen und die Messing-Abstandbolzen (11) herausziehen.
- Mit beiden Händen den Trafo halten und langsam aus dem Gerät nehmen.
  Die Vierkantmuttern im Trafo nicht verlieren.

Beim Einbau ist darauf zu achten, dass die Kabel denselben Verlauf beschreiben wie vor dem Ausbau.

### 2.4.2 POWER SUPPLY BOARD

- Je eine Schraube (12) an der Unterseite und an der linken Seite des Geräte-Chassis entfernen.
- Die Platine nach hinten aus dem Stecksockel ziehen.

### 2.4.3 POWERAMPLIFIER BOARD

- Das Gerät ohne Abdeckungen aufstellen; die rechte Seite wird zur Auflagefläche.
  Mit einer Hand sind Gerät und Endstufe so festzuhalten, dass sich die auszubauende Endstufe nicht verschieben kann.
  Bruchgefahr der schweren Teile wegen !
- Die Befestigungsschraube des Prints (13) lösen.
- Die 4 Schrauben (14) des Kühlblechs entfernen.
- Die Platine aus dem Stecksockel ziehen.

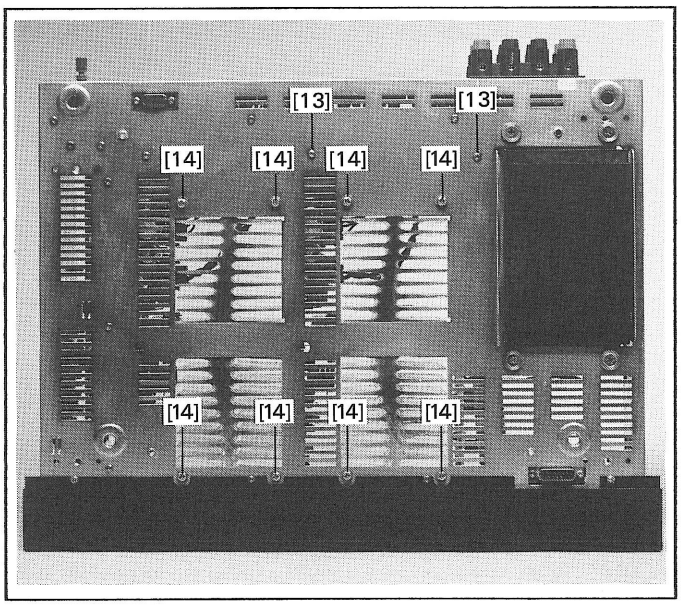


Fig.2.5.

## 2.4.4 PREAMPLIFIER BOARD

- 1 Schraube (15) an der Unterseite entfernen.
- Die Steckverbindung (16) zum INTERCONNECTION UNIT Print lösen.
- Den Print nach hinten aus dem Stecksockel ziehen.

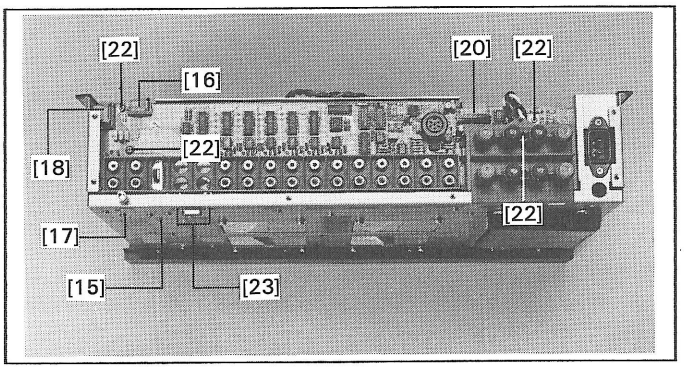


Fig.2.6

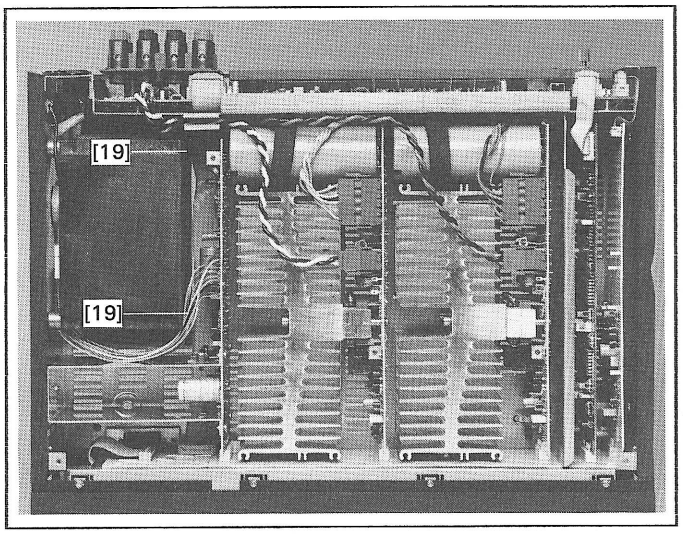


Fig.2.7

## 2.4.5 PHONO UNIT MM

- 1 Schraube (17) an der Unterseite entfernen (Fig.2.6).
- Die Steckverbindung (18) zum INTERCONNECTION UNIT Print lösen.
- Den Print nach hinten aus dem Stecksockel ziehen.

## 2.4.6 PHONO UNIT MM+MC CONVERSION KIT 1.725.253

Die Verkaufsgesellschaft bietet einen Umbausatz an, der es ermöglicht, am Verstärker REVOX B250/B250-S zusätzlich einen Plattenspieler mit Moving Coil Tonabnehmer zu betreiben.

**Inhalt:**

- PHONO UNIT MC+MM 1.725.250
- Abschirmblech mit zwei Befestigungsschrauben

**Einbau:**

- Das MM+MC Modul ist anstelle des MM Prints einzusetzen.
- Das gewinkelte Abschirmblech wird am Netztransformator befestigt.
- Seitlich am Transformator sind dazu vier Bohrungen für die Schrauben vorhanden (19).

## 2.4.7 INPUT/OUTPUT UNIT

- Die drei Steckverbindungen (16), (18), (20) ziehen.
- Die beiden Kabel (21) zu den Endstufen ausziehen und freilegen (Fig.2.3).
- Die fünf Befestigungsschrauben (22) des Prints entfernen.
- An der Geräteunterseite die beiden Schrauben (23) des D-Typ Steckers entfernen.
- Den Print, an den Lautsprecherklemmen haltend leicht nach vorne kippen, anheben und nach oben ausfahren.

## 2.5 FRONTTEIL ZERLEGEN

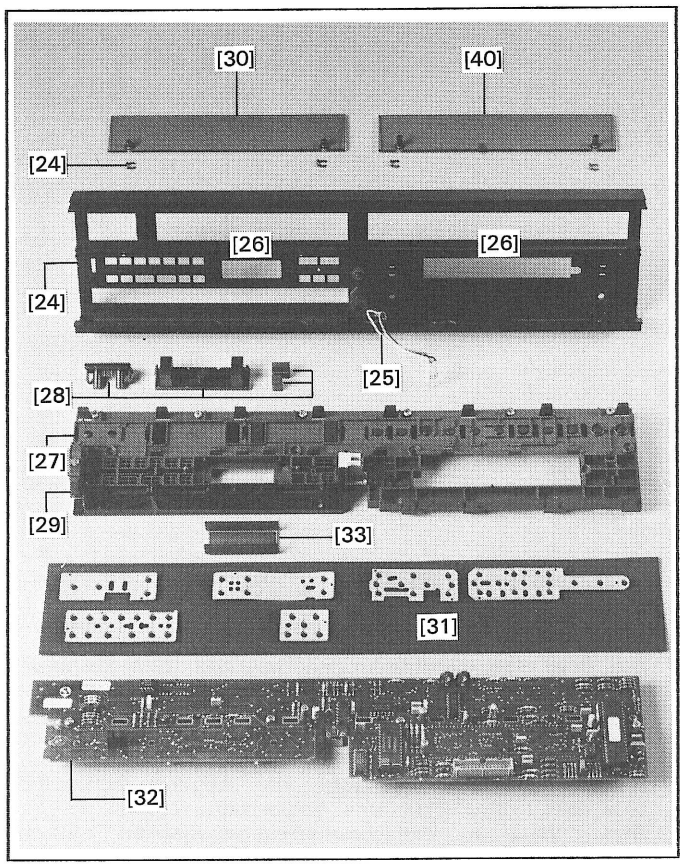


Fig.2.8

### 2.5.1 Bestandteile des Frontteils

- FRONTPROFIL (24) mit:
  -Kopfhörerbuchse (25)
  -eingebauten Display-Schutzgläsern (26)
- BEDIENUNGSCHASSIS (27) mit:
  -abnehmbaren Tasten (28)
  -Klappenmechanismus (29) für das Abdeckglas (30)
  -Schalter-Kontaktmatten (31)
- MICROPROCESSOR BOARD (32)

**Vorsicht!**

Beim Ausbauen des MICROPROCESSOR BOARD's kann das **LC-Display (33) herausfallen!** Bestehend aus einem kleinen Glasstück, liegt es auf zwei leitenden Gummistreifen (34), die wiederum nur auf dem MICROPROCESSOR BOARD aufliegen (Fig.2.8, Fig.2.9).

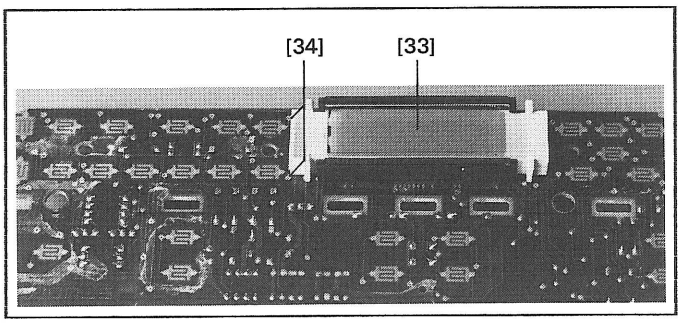


Fig.2.9

### 2.5.2 Ausbau des Frontteils

- 4 Schrauben (35) auf der Oberseite des Frontteils entfernen.
- Auf der Unterseite 4 Schrauben (36) lösen.
- Das Frontteil nach vorne abziehen.
- Die Steckverbindung auf dem MICROCOMPUTER BOARD lösen, sowie den Stecker der Kopfhörer-Buchse (25) ziehen.
- Das ausgebaute Frontteil für weiteres Zerlegen mit den Tasten nach unten auf eine weiche Unterlage legen.

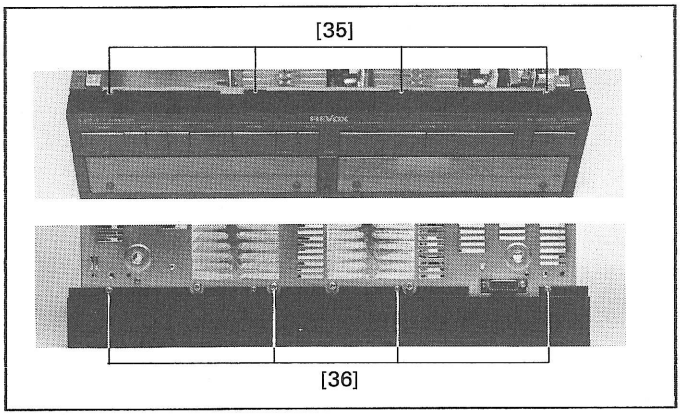


Fig.2.10

## 2.5.3 MICROCOMPUTER BOARD

- Die Schrauben (37) lösen.
- Aussen am Bedienungschassis beginnend sind nacheinander sämtliche Plastiklaschen (38) leicht vom Print wegzudrücken. Dabei ist dieser anzuheben, bis er ganz abgenommen werden kann.

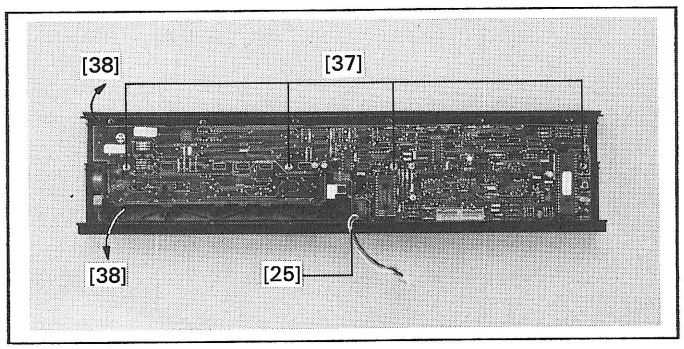


Fig.2.11

**Wichtig:**
Nach dem Einbau muss der Print wieder fest sitzen. Ein fast oder gar nichts anzeigendes LC-Display kann bedeuten, dass dies nicht mehr der Fall ist.

### Microcomputer System 1.725.290.81

Folgende Prozessoren wurden eingesetzt:

| Gerät B250 / B250-S | bis Nr.5300 / —— | ab Nr. 5301 / ab Nr.100001 |
|---|---|---|
| Prozessor (IC 2) | 1.725.290.05 | 1.725.295.05 |
| Input/Output Prozessor (IC 1) | 1.725.290.07 | 1.725.290.08 |

Wird der Geräteprozessor 1.725.295.05 als Ersatz von 1.725.290.05 eingesetzt, muss Anschluss Pin 19 von IC 1 unterbrochen werden.
Ferner müssen folgende Gerätefunktionen neu programmiert werden:

- Sensitivity Nominal, Store
- Max. Volume, Store
- Balance in die Mitte stellen
- Bass und Treble in die Mitte stellen

Wird der Input/Output Prozessor durch die Version 1.725.290.05 ersetzt, muss der Geräteprozessor ebenfalls durch den Typ 1.725.295.05 ausgetauscht werden. Für den Betrieb mit dem Controller B200 muss das Gerät die Prozessoren ab Serienummer B250 5301 enthalten. Bei Verstärkern mit Serienr. bis 5300 muss der Widerstand R78 ebenfalls von 3,3kΩ auf 1,8kΩ verkleinert (Microcomputer Board) oder parallel zu R78 ein Widerstand von 3,9kΩ angelötet werden.

## 2.5.4 Tasten

Die Mikrocomputer-Platine muss aus dem Frontteil ausgebaut werden.
Nur die oberen, metalloiden Tasten erfordern ein Werkzeug, um sie aus dem Bedienungschassis herauszulösen:

- Die betreffende Schalt-Gummimatte abheben.
- Einen Schraubenzieher senkrecht in den einen Schlitz der gewünschten Taste einführen.
- Den Griff des Schraubenziehers nun etwas von der auszubauenden Taste weg kippen. Dabei löst sie sich diese ein wenig und fällt ganz heraus, nachdem dasselbe beim zweiten Schlitz der Taste wiederholt worden ist.

## 2.5.5 Glasscheiben

- Der MICROCOMPUTER Print ist auszubauen.
- Die beiden Wellensicherungen (39) des auszubauenden Glases entfernen.
- Die Glasscheibe mit den Wellensicherungen von vorne herabnehmen.

**Achtung:**
Auf keinen Fall darf versucht werden, von innen her auf das von dort sichtbare Glas zu drücken; es ist keine zusätzliche Glasscheibe. Vielmehr handelt es sich dabei um die Flüssigkristall-Anzeige selbst, sowie um ein Schutz- und Filterglas der VFD-Anzeige !

Beim Einsetzen der neuen Scheibe ist darauf zu achten, dass die Gummiringe der Wellensicherungen nicht fehlen.

## 2.5.6 Bedienungschassis

- Die beiden Glasscheiben und die Mikrocomputer-Platine sind auszubauen.
- Das Frontteil auf eine weiche Unterlage legen.
- Durch Lösen der 6 Befestigungsschrauben (41) ist das Bedienungschassis vom Frontprofil (24) zu trennen.

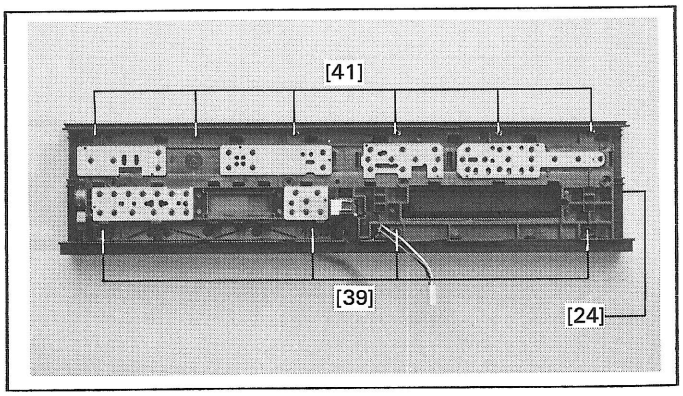


Fig.2.12

## 2.5.7 Klappenmechanismus

- Ist der Klappenmechanismus beschädigt, so muss das Dämpfungsgehäuse (42) geöffnet werden.
- Falls die Dämpfung der Klappe nicht wie gewünscht funktioniert, sollte das Gehäuse mit Silikonfett nachgefüllt werden.

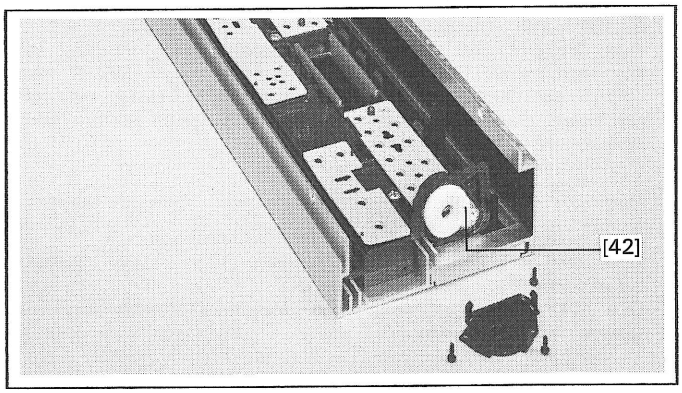


Fig.2.13

# 3. SCHALTUNGSBESCHREIBUNG

## 3.1 AUDIO-BLOCKSCHALTBILD

### Ein und Ausgänge

Die Hochpegeleingänge CD, AUX, TAPE 1/2 und TUNER sind mit einem Eingangsimpedanzwandler (1) und integrierten CMOS-Schaltern (2) realisiert.
Die Phonoeingänge (3) MM und MC (Option) werden auf eine separate Platine mit diskret aufgebauten Verstärkern durchgeschlauft. Die Eingangskapazität für den Phono MM lässt sich am Schiebeschalter (4) mit 50/150/450pF vorwählen.
Alle Eingänge führen auf die Stereo Sammelschienen (5/6). Mit der Sammelschiene (5) werden die Signale via einen Ausgangsimpedanzwandler (7) an den Ausgang RECORD gebracht. Die Ausgänge TAPE 1/2 sind gegeneinander verriegelt, damit keine unerwünschte Rückkopplung entstehen kann.
Mit der Sammelschiene (6) werden die Signale über einen Impedanzwandler (8) auf den Monitor-Ausgang und zum Preamplifier geführt. Von hier wird auch das Signal für die Messung der Eingangssensitivität abgegriffen.
Die CMOS-Schalter werden mit zwei 8-Bit Schieberegistern (9/10) geschaltet.

### Pegelsteller

Der Verstärkerpegel wird elektronisch mit einem Dual DAC (11) (Dual Digital/Analog Converter) geregelt. Diese Schaltung ermöglicht eine maximale Verstärkung von +22 dB und eine Dämpfung von -48 dB. Um die Dämpfung noch um weitere -30dB erhöhen zu können, ist dem Netzwerk ein Teiler (12) nachgeschaltet. Die kontinuierliche Absenkung wird durch fliessendes Umschalten von DAC und Teiler erreicht. Danach wirkt wieder der Regelbereich des DAC's von 0 bis -48dB. Das Zuschalten des Teilers ergibt also eine maximale Dämpfung von -78dB.
Die Steuerung dieses Netzwerkes erfolgt durch zwei in Serie liegende 8-Bit Schieberegister (13/14). Nach der Lautstärkenregelung gelangt das Signal an die Klangregelungsstufe.

### Klangregelstufe

Die Klangregelstufe ist aufgeteilt in Bass und Treble und kann wahlweise als eigentliche (Tone Control), oder als physiologische Lautstärkenregelung (Loudness) eingesetzt werden. Realisiert ist sie mit einem aktiven Bandpass (15) für tiefe und einem für hohe Frequenzen (16). Beide haben eine Glockenkurvencharakteristik.
Die Regelung erfolgt ähnlich wie bei der Lautstärke, nur dass hier zwei diskret aufgebaute 3-Bit DACs verwendet werden. Diese erlauben eine Regelung der tiefen Frequenzen im Resonanzbereich bei (40 Hz) von +/-12dB und eine Regelung der hohen Frequenzen im Resonanzbereich bei (14kHz) von +/-12dB. Die Steuerung erfolgt über zwei in Serie liegende Schieberegister (17/18).
Mit elektronischen Schaltern (19...22) kann man die Tone Control-Stufe überbrücken resp. einschlaufen.

### Leistungsverstärker/Preamp.Output/Phones

Ueber zwei verschiedene Pfade wird das Signal weitergeführt. Zum einen an den PREAMP OUTPUT, zum andern an den POWER AMPLIFIER , welcher über eine Leistung von max. 200W an 4Ω verfügt.
Ein NTC-Widerstand (23) dient als Geber (Signal Temp.) zur Temperaturüberwachung der Endstufe durch die Microcomputersteuerung. Wird die Taste SEPARATED betätigt, so öffnen sich die Schalter (19/20), der Schalter (24) schliesst sich, wodurch der POWER AMP INPUT aktiviert wird.
Mit drei Ausgangswählschaltern lassen sich über Relais die Lautsprecherausgänge A/B (26/27) und der PREAMP OUTPUT (29) schalten. Der Kopfhörer-Ausgang schaltet sich automatisch ein. Er wird mit einem Spannungsteiler abgeschwächt. Gesteuert werden die Relais über das Schieberegister (25). Der Enable dieses Schieberegisters wird vom POWER FAIL Detector (30) erzeugt. Dieser sorgt beim Anschliessen ans Netz dafür, dass die Relais verzögert eingeschaltet werden, damit die Speisespannungen Zeit haben sich zu stabilisieren.
Im Falle eines Netzunterbruchs fallen die Relais sofort ab.

## 3.2 BLOCKSCHALTBILD MICROCOMPUTER-SYSTEM

### Microcomputer Control

Das Microcomputersystem besteht aus zwei verschiedenen Microcomputern. Microcomputer (1) ist zuständig für die anwendungsspezifischen Aufgaben. Er verwaltet den I²C-Bus. Er ist der Master Prozessor. Er hat alleinigen Zugriff auf den Speicherbaustein und übernimmt die ganze Steuerarbeit.
Microcomputer (2) ist zuständig für das Abfragen des Keyboards (16) und für die Steuerung der Fluoreszenz-Anzeige (17).

### Microcomputer (1)

Das EEPROM (3) und der LCD-Driver (4) werden vom Microcomputer (1) über den I²C-Bus direkt angewählt. Verschiedene Informationen, die über das Tastenfeld eingegeben werden, sind nachher im EEPROM (3) abgelegt.
An der seriellen Schnittstelle sind noch weitere Bausteine, die der Microcomputer (1) steuert. Es sind dies die Schieberegister (Kap.3.1: 9, 10, 13, 14, 17, 18, 25). Sie werden über die serielle Schnittstelle geladen. Mit den Strobes (STR VOLUME, STR SELECT, STR INPUT) werden die Daten in die Latches übernommen.
Weitere Aufgaben dieses Microcomputers sind das Ueberwachen resp. Abfragen und Vergleichen von Signalen.

### Sensitivity

Die Signale INPUT L/R vom INPUT-OUTPUT UNIT werden mit dem Operationsverstärker (5) addiert und mit einem Spitzengleichrichter (6) in eine DC-Spannung umgewandelt. Danach wird diese Spannung vom Microcomputer (1) über den Komparator (7) ausgewertet. Dies geschieht, indem er über den DA-Wandler (8) die

## AUDIO BLOCK DIAGRAM (LEFT CHANNEL)

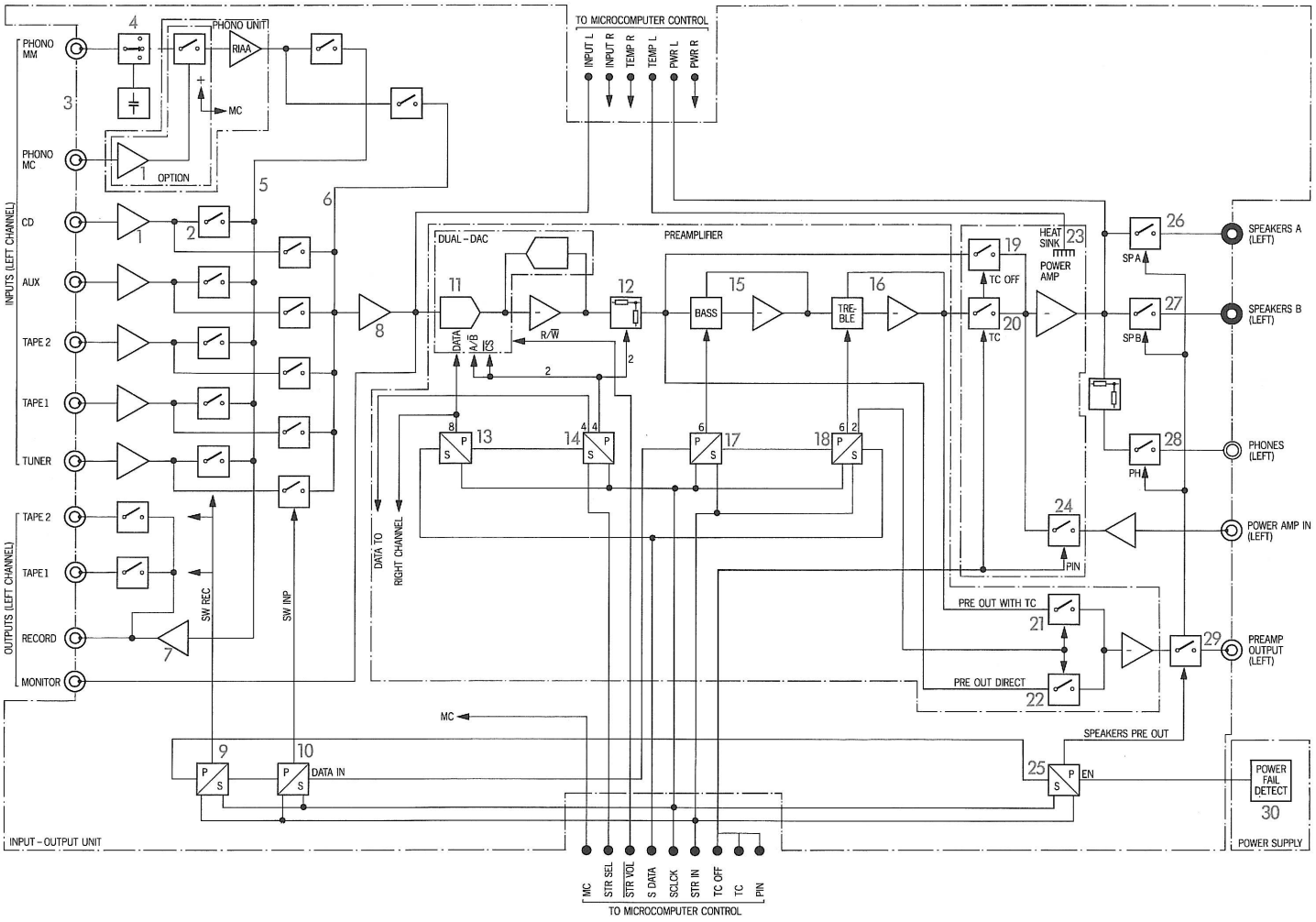


## MICROCOMPUTER SYSTEM

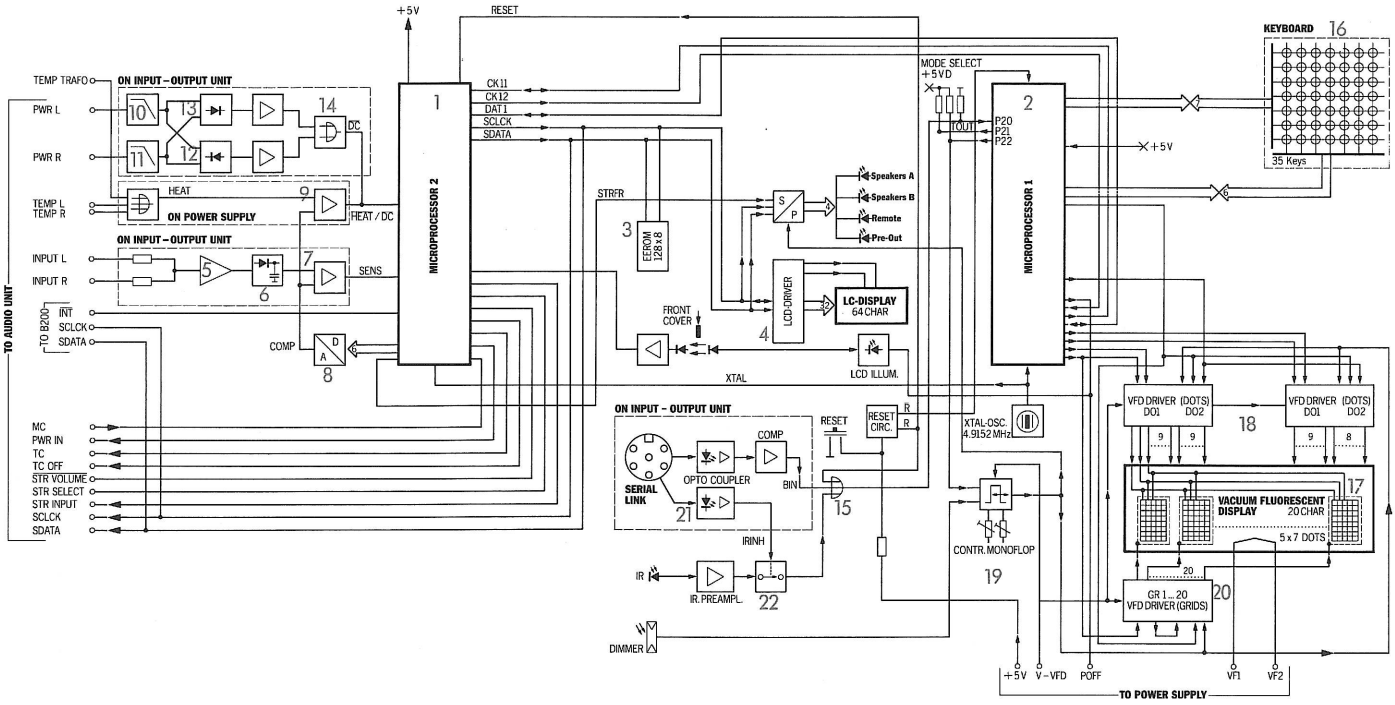

Referenzspannung des Komparators so lange verstellt, bis dieser schaltet. Die so festgestellte Eingangsspannung wird nun mit der abgespeicherten NOMINAL SENSITIVITY von 500mV verglichen und die Differenz im EEPROM abgespeichert. Beim Umschalten der Quelle wird der Volumen-Pegelsteller entsprechend der abgespeicherten Differenz nachgeregelt.

## Heat und DC Ueberwachung

Im Gerät befinden sich drei Temperaturfühler (NTC) für PWR L, PWR R, und den Trafo. Sie werden zusammen auf den Komparator (9) geführt. Die Ueberwachung umfasst drei Stufen.
Die erste Schwelle wird erreicht, wenn eine der drei Ueberwachungsspannung über 2,0 V steigt. Als Reaktion darauf wird das Volumen um 10dB abgesenkt. In der Anzeige erscheint ( <<<< )
Die zweite Schwelle liegt bei 2,7 V . Es bedeutet, dass der Trafo oder eine der Endstufen überhitzt ist (100°C). In der Anzeige erscheint (OVERLOADED !!!) und die Relais (Kap.3.1: 26, 27, 28, 29) fallen sofort ab.
Die dritte Stufe wird bei 4,5 V erreicht. Es bedeutet, dass sich eine DC-Spannung an den PWR OUTPUTS befindet. Dies wird festgestellt, indem man die Ausgänge PWR L/R auf zwei Tiefpässe (10, 11) führt, die Signale mittels eines negativen und eines positiven Spitzengleichrichters (12, 13) in DC umwandelt, und das so gewonnene Resultat über ein OR-Gate (14) an den Ueberwachungseingang des Microcomputers bringt. Dieser merkt, dass die höchste Schwelle erreicht ist. Er schaltet sofort die Ausgangsrelais ab und auf der Anzeige erscheint (BREAKDOWN!!!).
Weiter ist da noch das COVER Signal, das anzeigt ob die Frontklappe offen oder zu ist. Wird sie geschlossen, so bricht der Microcomputer eine nicht abgeschlossene Programmierung ab. Gleichzeitig bewirkt aber das COVER-Signal auch noch, dass die LCD Beleuchtung abgeschaltet wird. Die Komunikation zwischen den beiden Microcomputern erfolgt im sogenannten Handshake Verfahren über die Leitungen DAT1, CK11, CK12. Den Clock erhält der Microcomputer (1) über einen Driver vom 4.9152 Mhz Quarz Oszillator des Microcomputer (2).

## Der Microcomputer (2)

Der Microcomputer (2) ist im "Einchip Mode" geschaltet. Das heisst seine Ein und Ausgänge sind als Ports geschaltet. Nach jedem RESET muss dieser Microcomputer wieder in den richtigen Mode gebracht werden.
Dies geschieht hardware-mässig über die Ports P20, P21, P22. P21 und P22 sind über Widerstände auf high gelegt. P20 erhält vom Reset IC via ein OR-Gatter (15) ein "high".
Ueber die verschiedenen Ports liest er zum einen eine Keyboardmatrix (16) von 29 Drucktasten, zum andern steuert er die Fluoreszenz-Anzeige (17).
Zu seinen Aufgaben gehört auch der Datenverkehr via Serial Link und das Empfangen der IR-Signale. Wird das Gerät in "STAND BY mode" gebracht, so schaltet der Microcomputer (2) mit dem Signal POFF das Netzteil aus.

## Serial Link

Ueber eine 6 Pol Din-Buchse wird der Datenverkehr über einen Optokoppler (21) zwischen dem Controller und dem Microcomputer abgewickelt. Zusätzlich kann der IR-Eingang mittels Optokoppler abgeschaltet werden. Dies geschieht dadurch, dass die Speisespannung vom Conroller zur Bibusbuchse zurückgeführt wird und dort via Optokoppler (21) mit dem Schalter (22) die Leitung nach dem IR-Preamp. unterbricht.

## Fluoreszenz-Anzeige

Ueber vier parallele Portleitungen werden seriell je 10 Bit Daten in die DOTS Driver (18) geladen. Weiter gibt der Microcomputer einen Blankimpuls via ein Monoflop (19).
Während dieser Dunkeltastzeit wird mit den GRIDS Drivern (20) auf die nächste Ziffer geschaltet und die dazugehörenden Daten vom DOTS Driver übernommen.
Das Umschalten der einzelnen Ziffern erfolgt mit einer Frequenz von 2KHz. Das ergibt dann für die einzelne Ziffer eine Multiplex-Frequenz von 100Hz.
Ein LDR (als Sensor für die Umgebungshelligkeit) verändert die Länge der Dunkel-Steuerung, was dann eine Helligkeitsänderung bei der Anzeige zur Folge hat.

# 3.3 MAINS TRANSFORMER

## B250/B250-S

Das Netzteil besteht aus einem Transformer, der mit einem Netzspannungswähler von 100-240 Volt AC umschaltbar ist.
Auf der Sekundärseite hat es sechs Wicklungen: Erstens eine für +/-16V mit Mittelabgriff, eine für VVFD (+33V), eine weitere für +5V und eine für die Heizung des Vacuum Fluorescent Display's mit Mittelabgriff. Diese Heizung wird im STAND BY MODE durch einen elektronischen Schalter unterbrochen.
Die Mittelanzapfung wird mit 6 Volt DC vorgespannt.
Für die beiden POWER AMPLIFIER L/R gibt es je eine Wicklung mit Mittelabgriff von 42 Volt AC plus Zusatzwicklungen von 53 Volt AC.
Ueber das POFF Signal wird das Netzteil gesteuert. Es schaltet direkt die VVFD- und die +16V-Spannung. Der Regler für -16V und der Schalter der Heizung werden durch die +16V Spannung gesteuert. Die +5V Spannung bleibt auch im "STAND BY -Betrieb" erhalten (Versorgung der Microcomputer).

## B150

Den Netztrafo gibt es in drei verschiedenen Versionen für 110 V, 220 V, sowie 240 V Netzspannung.
Der Thermofühler (B250/B250-S) entfällt, dafür ist auf der Primärseite ein Thermoschalter (120°C) eingebaut.

## MAINS TRANSFORMER B250/B250–S

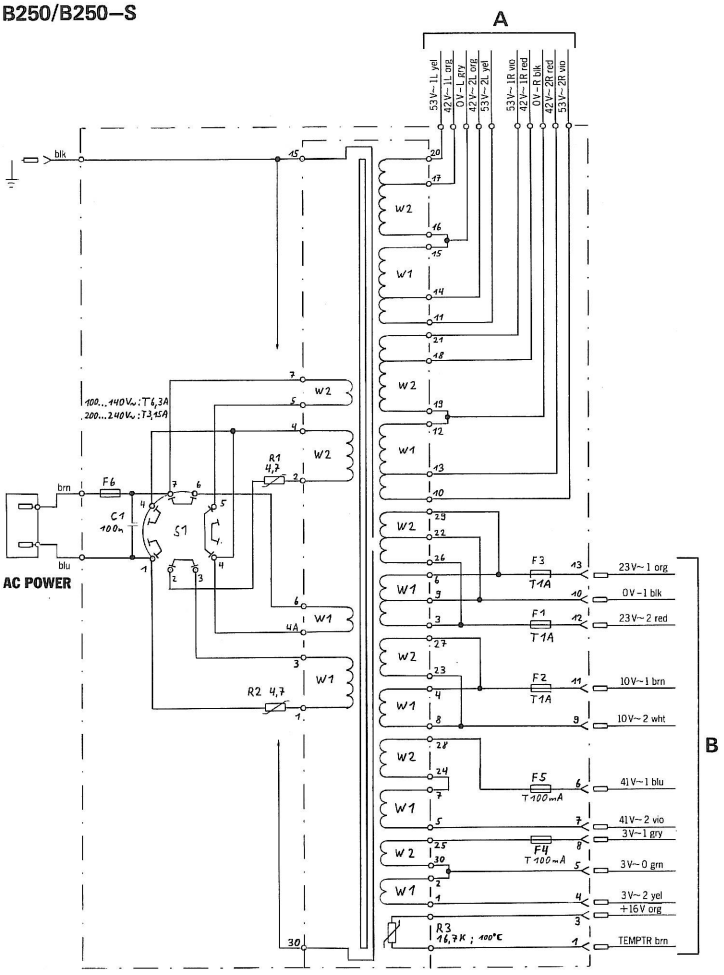


A: TO POWER AMPLIFIER
B: TO POWER SUPPLY UNIT

## MAINS TRANSFORMER B150

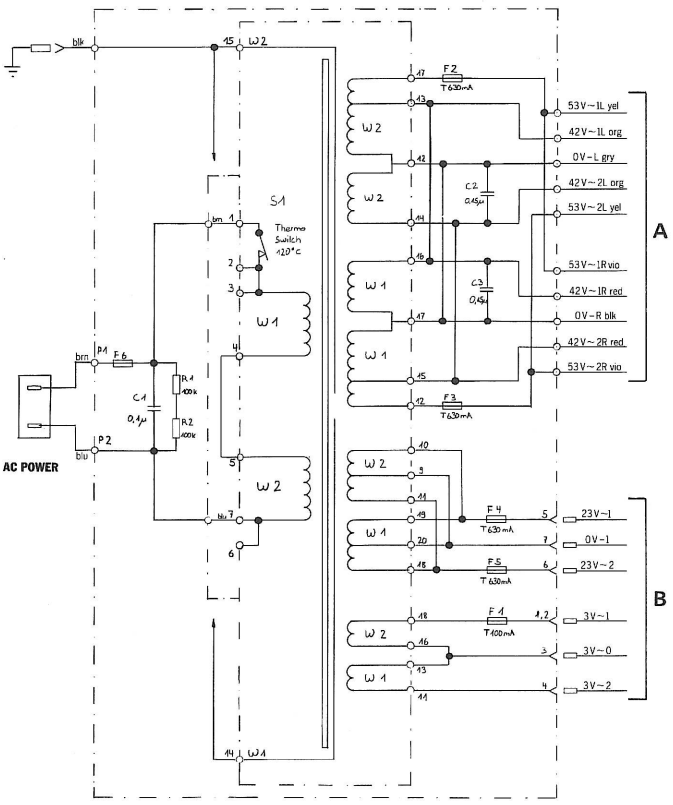


A: TO POWER AMPLIFIER
B: TO POWER SUPPLY UNIT

# 4. ELEKTRISCHE MESSUNGEN UND EINSTELLUNGEN

## 4.1 MESSGERÄTE, HILFSMITTEL

**VORSICHT!**
**Elektrisierungsgefahr bei geöffnetem Gerät.**
**Teile führen Netzspannung!**

- NF-Voltmeter Best.Nr.46020
- Digitalvoltmeter auf Anfrage
- Oszillograph " "

## 4.2 VORBEREITUNGEN

- Das obere Abdeckblech entfernen. (Kap.2.2.1)

## 4.3 BETRIEBSSPANNUNGEN

Betriebsspannungen POWER AMPLIFIER:

| Spannung | Pin | Stecker Linker Kanal | Stecker Rechter Kanal |
|---|---|---|---|
| 53 V | Pin1 | gelb | violett |
| 53 V | Pin2 | gelb | violett |
| 42 V | Pin3 | orange | rot |
| 42 V | Pin4 | orange | rot |
| 0 V | Pin4 | grau | schwarz |

Die Spannungen müssen für beide Endstufen einzeln gemessen werden, da der Transformator für jeden Kanal getrennte Wicklungen aufweist.

## 4.4 RUHESTROM

- Gerät einschalten;Die Ruhestrommessung ist bei **Betriebstemperatur** auszuführen. Diese ist etwa 10 Minuten nach dem Einschalten das Geräts erreicht.
- NF-Voltmeter an POWER AMPLIFIER anschliessen:

  TP1 --> +
  TP2 --> -

- Mit Potentiometer RA91 eine Spannung von 1mV einstellen.
- Dieselbe Einstellung an der zweiten Endstufe wiederholen.

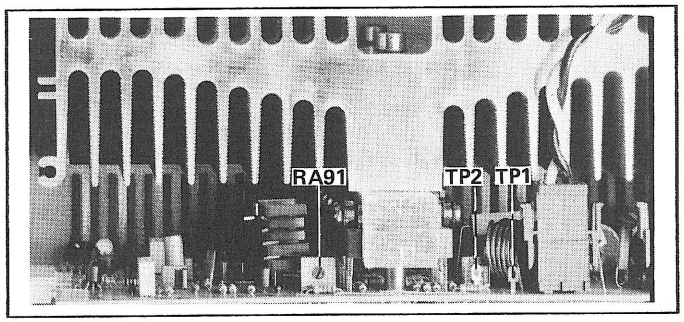

Fig.4.1

## 4.5 HELLIGKEITSSTEUERUNG VF-DISPLAY

Mit den beiden Einstellreglern R67 und R70 wird die auf Umgebungshelligkeit reagierende Elektronik abgeglichen:

- Frontteil lösen bis beide Potentiometer sichtbar werden.
- Oszillograph an ATP1 anschliessen (IC9 Pin6);
  Horizontal: 50µs/Div.
  Vertikal: 1 V/Div.

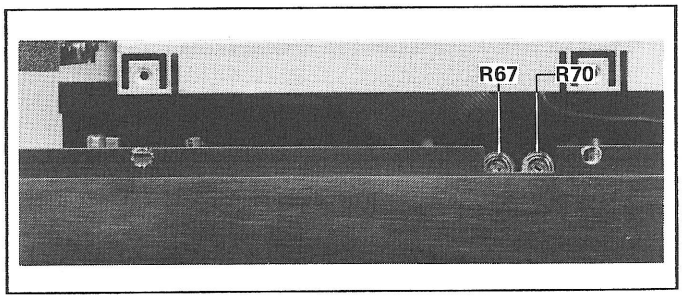

Fig. 4.2

- Potentiometer R67 im Gegenuhrzeigersinn auf Minimum drehen.
- Bei völliger Dunkelheit mit R70 ein Tastverhältnis von 9:1 einstellen.
- Gelbe Lichtquelle bei 20 Lux Lichtstärke vor dem linken Glas im Bereich des Photowiderstandes aufstellen.
- Mit R67 ein Tastverhältnis von 4:1 einstellen.
- Lichtstärke auf 200 Lux erhöhen, dabei muss das Tastverhältnis kleiner als 1:9 werden.

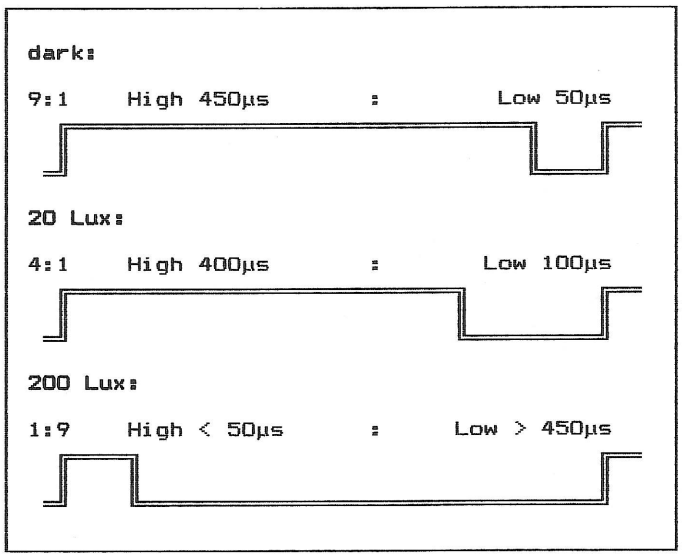


Fig. 4.3

Geräte mit POWER SUPPLY UNIT Nr.1.726.230.81 haben einen zusätzlichen Einstellregler RA1. Er erlaubt, die Grundhelligkeit mit einem Schraubendreher zu verändern, ohne das Gerät zu demontieren.

Grundeinstellung: RA1 an rechtem Anschlag
--> volle Spannung am Display
--> V-FIP ≈ 36 V

Maximale Änderung: RA1 an linkem Anschlag
--> 2/3 V-FIP ≈ 24 V

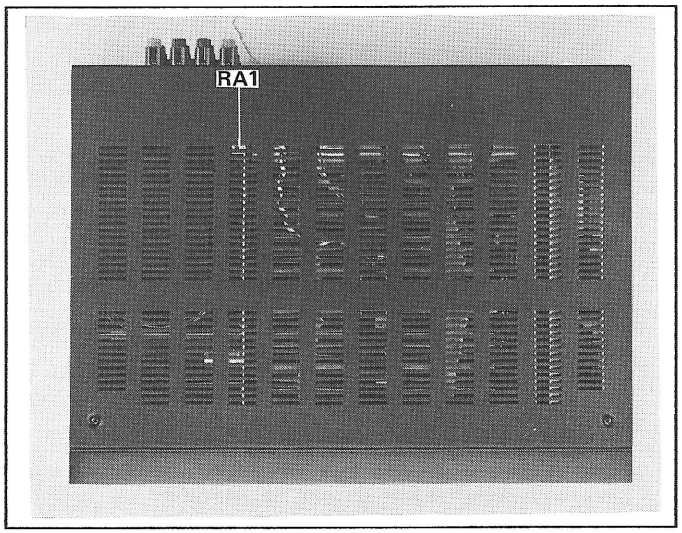


Fig. 4.4

E N G L I S H

Contents Page


| | | |
|---|---|---|
| | Handling of MOS components | |
| 1. | OPERATOR CONTROLS AND CONNECTIONS | |
| 1.1 | FRONT PANEL | |
| 1.2 | REAR PANEL | |
| 2. | DISASSEMBLY | |
| 2.1 | GENERAL | |
| 2.1.1 | Warnings | |
| 2.1.2 | Required tools | |
| 2.2 | REMOVING THE COVERS | |
| 2.2.1 | Top cover | |
| 2.2.2 | Side covers | |
| 2.3 | FUSES | |
| 2.4 | DISASSEMBLING THE CHASSIS | |
| 2.4.1 | Power transformer | |
| 2.4.2 | POWER SUPPLY BOARD | |
| 2.4.3 | POWER AMPLIFIER BOARD | |
| 2.4.4 | PREAMPLIFIER BOARD | |
| 2.4.5 | PHONO UNIT MM | |
| 2.4.6 | PHONO UNIT MM+MC CONVERSION KIT | |
| 2.4.7 | INPUT/OUTPUT UNIT | |
| 2.5 | DISASSEMBLING THE FRONT PANEL | |
| 2.5.1 | Front panel parts | |
| 2.5.2 | Removing the front panel | |
| 2.5.3 | Microcomputer board | |
| 2.5.4 | Keys | |
| 2.5.5 | Glass panels | |
| 2.5.6 | Operating chassis | |
| 2.5.7 | Hinge mechanism | |
| 3. | CIRCUIT DESCRIPTION | |
| 3.1 | AUDIO | |
| 3.2 | MICROCOMPUTER SYSTEM | |
| 3.3 | POWER TRANSFORMER, VOLTAGE REGULATION | |
| 4. | ELECTRICAL MEASUREMENTS AND ADJUSTMENTS | |
| 4.1 | MEASURING INSTRUMENTS AND TOOLS | |
| 4.2 | PREPARATORY STEPS | |
| 4.3 | OPERATING VOLTAGES | |
| 4.4 | QUIESCENT CURRENT | |
| 4.5 | BRIGHTNESS CONTROL OF THE VF DISPLAY | |
| 5. | CIRCUIT DIAGRAMS | |
| 6. | MECHANICAL SPARE PARTS | |
| 7. | TECHNICAL DATA | |

# 1. INDEX OF KEYPAD FUNCTIONS AND CONNECTIONS

## 1.1 FRONT PANEL

| | | |
|---|---|---|
| | »» | Functions that respond to the REVOX B 208 IR remote control. |

| [X] | OPERATING ELEMENT | | Function |
|---|---|---|---|
| [1] | POWER | »» | On/off switch. The amplifier is switched on in the last active mode. The amplifier is switched off (standby) when this key is pressed again. |
| [2] | VOLUME + | »» | Increases the volume. With > in 1 dB steps, with >> in 3 dB steps. Increases the level in programming mode. |
| [3] | VOLUME – | »» | Decreases the volume. With < in 1 dB steps, with << in 3 dB steps. Decreases the level in programming mode. |
| [4] | OPEN | | Opens the hinged cover of the auxiliary keypad and contains the IR receiver. To reclose the cover simply push it up. |
| [5] | –20 dB | »» | Decreases the volume by –20 dB each time this key is pressed. Can be reset with VOLUME + [2]. |
| [6] | VIDEO | | Only active in conjunction with the REVOX B200 Controller. Can be used for selecting additional signal sources such as TV, VCR 1/2 and DISC. |
| [7] | PHONO | »» | Signal source selection key for turntable. |
| [8] | CD | »» | Signal source selection key for CD player. |
| [9] | AUX | »» | Signal source selection key for the auxiliary input. |
| [10] | TAPE 2 | »» | Signal source selection key for tape recorder 2. |
| [11] | TAPE 1 | »» | Signal source selection key for tape recorder 1. |
| [12] | TUNER | »» | Signal source selection key for TUNER. |
| [13] | PRE-OUT | »» | This pilot LED is lit when the preamplifier output PRE-OUT is switched on. |
| [14] | REMOTE | | This LED lights up when an IR signal is being received. |
| [15] | Display | | 20-position vacuum fluorescence display. Indicates the operating state of the amplifier. |
| [16] | SPEAKERS B | | This LED is lit when the SPEAKERS B output is switched on. |
| [17] | SPEAKERS A | | This LED is lit when the SPEAKERS A output is switched on. |
| [18] | PHONES | | Headphones socket |
| [19] | REC-OUT | | The recording source differs from the listening source. The display [15] changes the display mode to e.g.: IN:TUNER REC:TAPE 1. |
| [20] | MC | | Selects the moving coil PHONO preamplifier if the MC option is installed, otherwise this key is inactive. |
| [21] | SEPARATED | | Separates the preamplifier from the power amplifier so that e.g. an equalizer can be looped in. |

| | | | |
|---|---|---|---|
| [22] | MAX VOLUME | | Activates the mode for programming the MAX VOLUME of the individual outputs and the PWR-ON VOLUME. |
| [23] | REC=IN | | The recording source is the same as the listening source. The display [15] changes the indicating mode to: signal source, volume, and balance setting. |
| [24] | LC display | | Multifunction display field with graphs for: BASS, TREBLE, MAX VOLUME, SENSITIVITY, etc. |
| [25] | BASS - | » | Reduces the content of low frequencies. The current setting is displayed when you press this key the first time. |
| [26] | SENSITIVITY | | Activates the mode for programming a volume compensation in favor of an output and the SENSITIVITY of the signal sources. |
| [27] | BASS + | » | Increases the content of low frequencies. The current setting is displayed when you press this key the first time. |
| [28] | LOUDN | | Switches the tone compensated volume control (LOUDNESS function) on and off. |
| [29] | TONE | » | Switches the tone control (BASS, TREBLE) on and off. |
| [30] | BALANCE L | » | Shifts the output level in favour of the left-hand channel. |
| [31] | TREBLE - | » | Decreases the content of high frequencies. The current setting is displayed when you press this key the first time. |
| [32] | BALANCE R | » | Shifts the output level in favor of the right-hand channel. |
| [33] | TREBLE + | » | Increases the content of high frequencies. The current setting is displayed when you press this key the first time. |
| [34] | PRE-OUT | » | Switches the preamplifier output PRE-AMP on and off. |
| [35] | SPEAKERS A | » | Switches the SPEAKERS A on and off. |
| [36] | STORE | | Stores the programmed MAX VOLUME or SENSITIVITY setting (except SENSITIVITY INPUT). A programming sequence can be cancelled at any time without storing by simply closing the cover. |
| [37] | SPEAKERS B | » | Switches the SPEAKERS B on and off. |

## 1.2 REAR PANEL

| [X] | OPERATING ELEMENT | Function |
|---|---|---|
| [38] | PHONO MC | Input sockets (CINCH) for a turntable with moving coil cartridge system (option). |
| [39] | | Terminal for turntable ground. |
| [40] | PHONO MM | Input sockets (CINCH) for a turntable with moving magnet cartridge system. |
| [41] | PF | Switch for matching the input capacitance of the PHONO MM input to the capacitance of the turntable. |
| [42] | CD | Input sockets (CINCH) for a CD player. |
| [43] | AUX | Input sockets (CINCH) for an additional signal source (auxiliary input). |
| [44] | TAPE 2 | Input sockets (CINCH) for playback from tape recorder 2. |
| [45] | TAPE 1 | Input sockets (CINCH) for playback from tape recorder 1. |
| [46] | TUNER | Input sockets (CINCH) for a tuner. |
| [47] | PWR-AMP | Input sockets (CINCH) for direct feeding into the output stages. |
| [48] | MONITOR | Output sockets (CINCH) with fixed level for an additional amplifier. |
| [49] | TAPE 2 | Output sockets (CINCH) for recording with tape deck 2. |
| [50] | TAPE 1 | Output sockets (CINCH) for recording with tape deck 1. |
| [51] | RECORD | Output sockets (CINCH) for an additional recording channel (third tape deck). |
| [52] | SERIAL LINK | Serial control terminal for connecting an external REVOX B206 IR receiver. The internal IR receiver can also be switched off via this socket (interconnect pin1 with pin2 and pin4 with pin5). |
| [53] | PRE-AMP | Output sockets (CINCH) for connecting active speaker boxes. (Preamplifier output). |
| [54] | SPEAKERS A | Speaker terminals for speaker group A. |
| [55] | SPEAKERS B | Speaker terminals for speaker group B. |
| [56] | AC POWER | Power connection. |

## B150

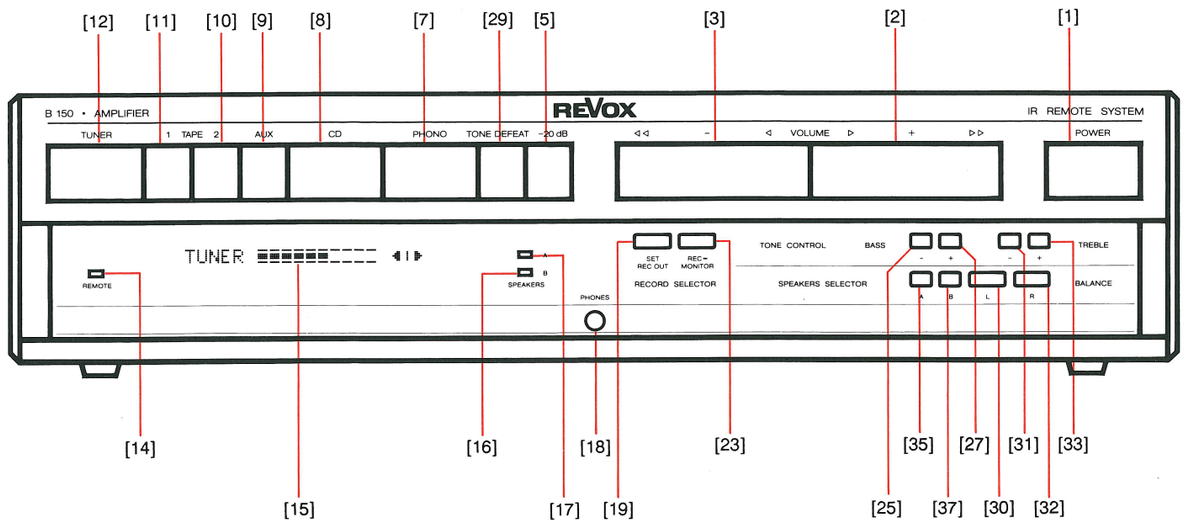


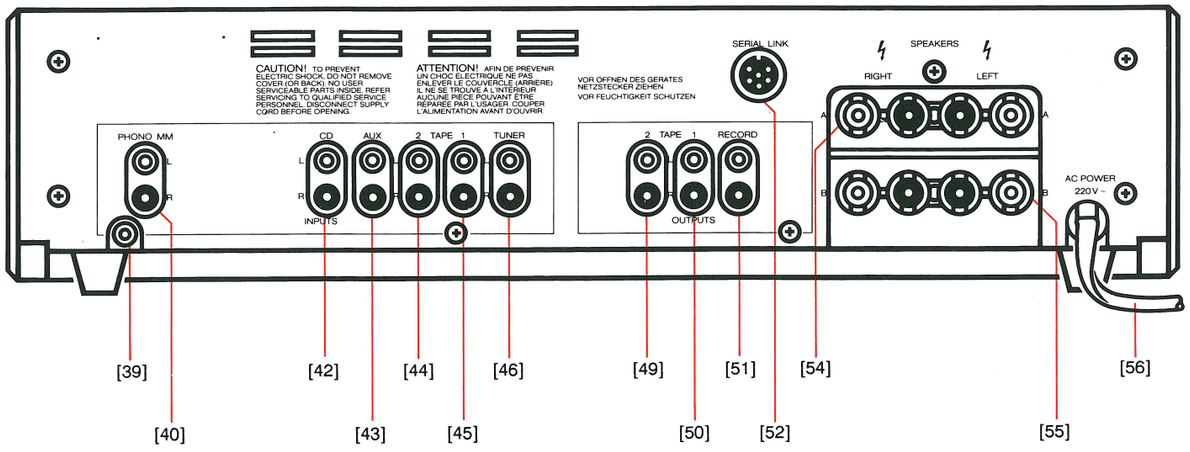


## B250 (B250–S)

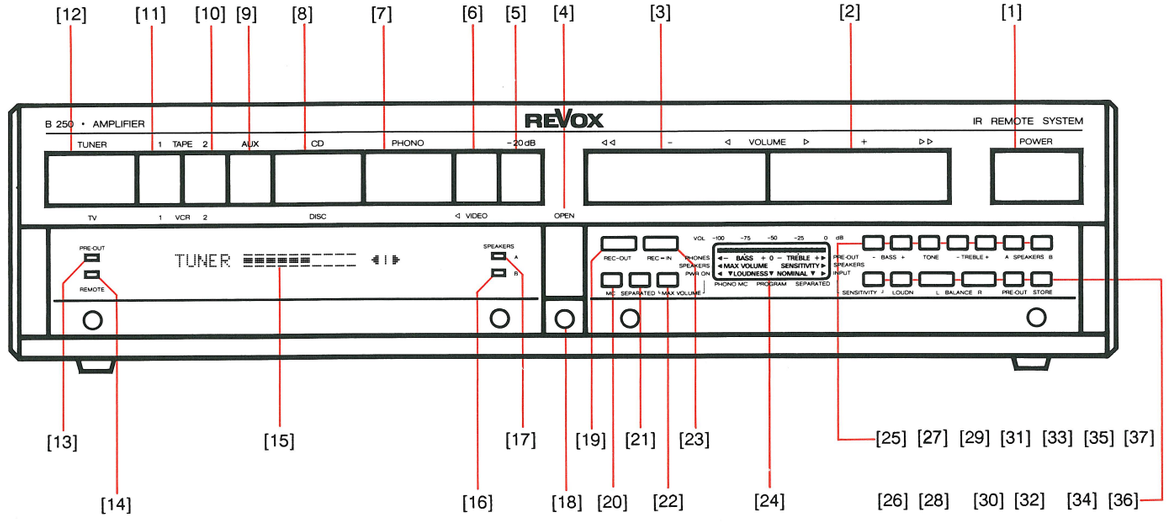


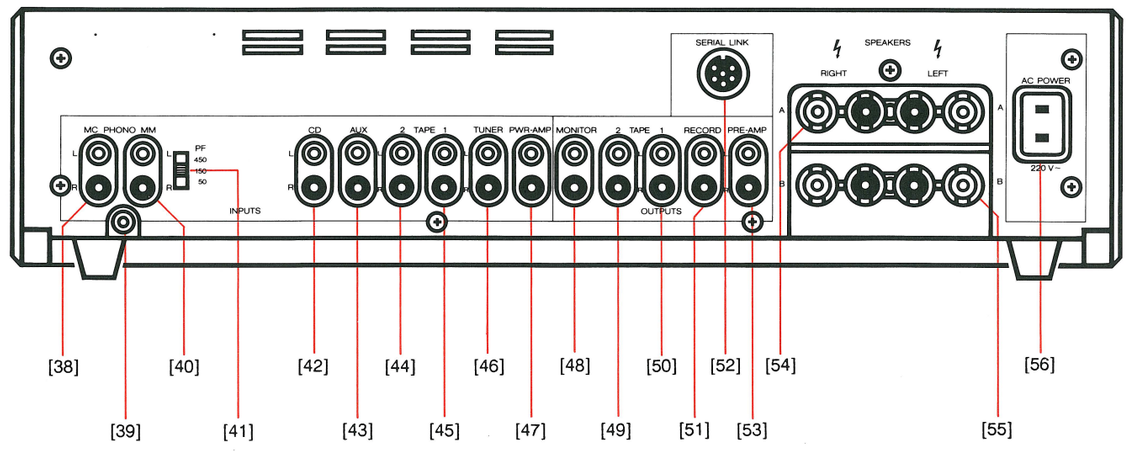

# 2. DISASSEMBLY

## 2.1 GENERAL

### 2.1.1 Warnings

**Caution!**
Disconnect the power plug
before you open the amplifier!

- Electronic components are very sensitive to electrostatic charges. For this reason the MOS handling instructions given at the beginning of this manual should be strictly followed.
- The workbench should be lined with soft padding material in order to prevent marring of the front panel.

### 2.1.2 Required tools

| | | |
|---|---|---|
| 1 | Phillips screwdriver | size 0 |
| 1 | Phillips screwdriver | size 1 |
| 1 | Phillips screwdriver | size 2 |
| 1 | Screwdriver | size 1 |
| 1 | Screwdriver | size 2 |
| 1 | ESE workbench kit | Part No. 46200 |

## 2.2 REMOVING THE COVERS

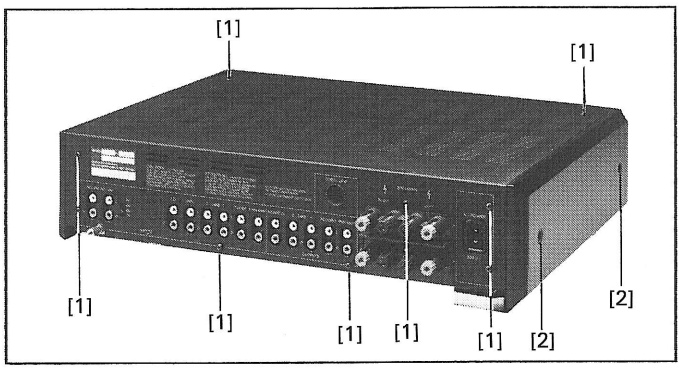


Fig.2.1

### 2.2.1 Top cover

- Remove 9 screws (1) on the top and rear (Fig. 2.1).
- Push the cover slightly backward so that it can be lifted off.

### 2.2.2 Side covers

- Unfasten 2 screws (2) on each side (Fig. 2.1).

## 2.3 FUSES

- Disconnect the power cord!
- Remove the top cover according to Section 2.2.1.
- Twist the white plastic cap and remove it.
- Replace the blown fuses:

**B250, B250-S:**

- **Primary:**
  F6 with shock protection
  100...140 V --> 6.3 A slow
  200...240 V --> 3.15 A slow

- **Secondary:**
  F1, F2, F3 --> 1 A slow
  F4 --> 100 mA slow
  F5 --> 315 mA

**B150:**

- **Primary:**
  F6 with shock protection
  110 V --> 5 A slow
  220/240 V --> 2.5 A slow

- **Secondary:**
  F1 --> 100 mA slow
  F2, F3, F4, F5 --> 630 mA slow

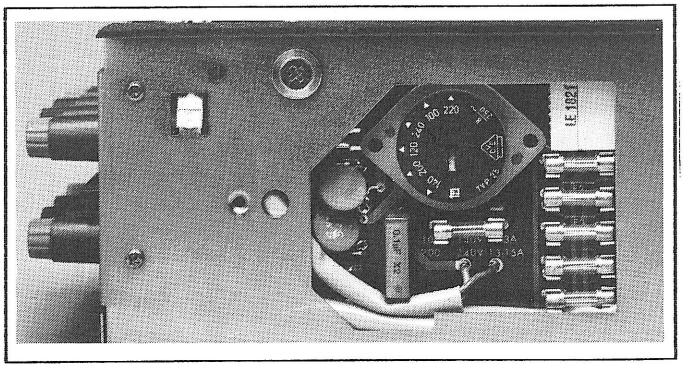

Fig.2.2

## 2.4 DISASSEMBLING THE CHASSIS

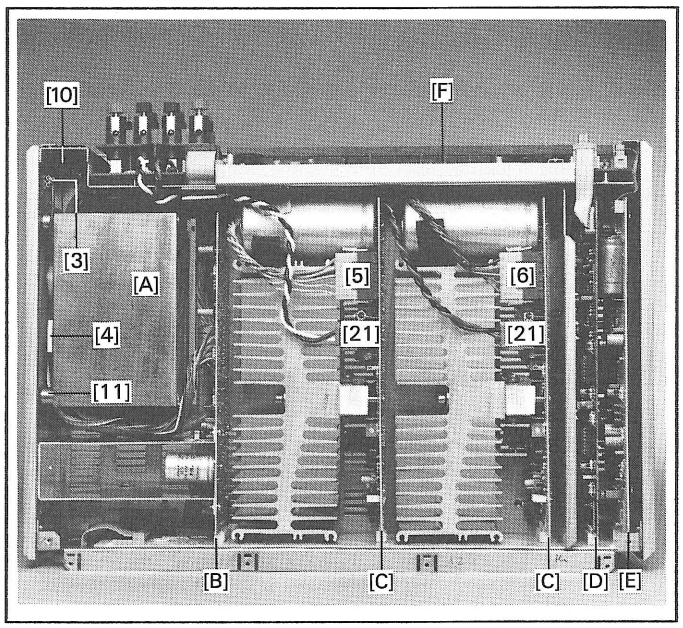


Fig.2.3

A: Power transformer
B: Power supply
C: Power amplifier
D: Preamplifier
E: Phono unit
F: Input/output

### 2.4.1 Power transformer

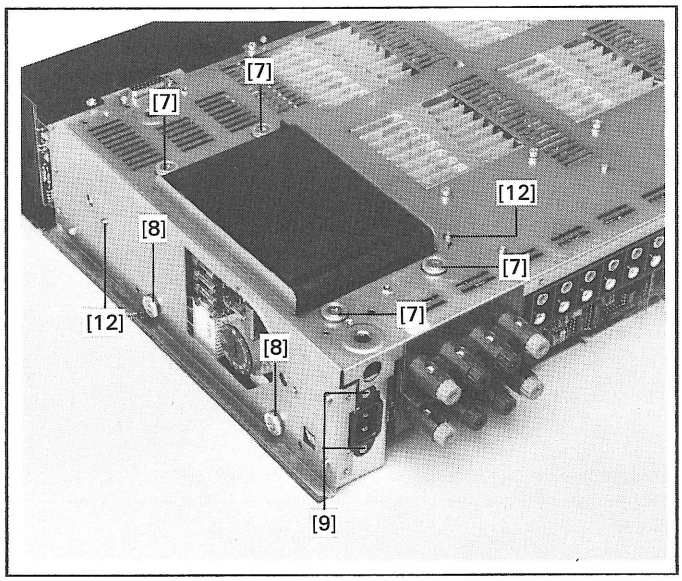


Fig.2.4

- Turn the amplifier upside down.
- Unfasten the four screws with washers (7) on the bottom cover.
- Put the amplifier back to its normal operating position.
- Remove the two screws (9) of the power inlet (10): through the opening in the housing push the socket to the inside of the amplifier.
- Unfasten the plug connections (3, 4, 5, 6).
- Unfasten the two screws (8) and pull out the brass spacing pins (11).
- Grip the transformer with both hands and carefully lift it out of the amplifier.
  Do not lose the square nuts of the transformer.

When reinstalling the transformer make sure that the cables are routed along the original path.

### 2.4.2 POWER SUPPLY BOARD

- Unfasten one screw (12) each on the bottom and on the left-hand side of the amplifier chassis.
- Pull the circuit board out of its socket from the rear.

### 2.4.3 POWER AMPLIFIER BOARD

- Set the amplifier upright without covers so that it rests on the right-hand side.
  With one hand secure the amplifier and the output stage in such a way that the output stage to be removed cannot shift.
  If these parts are dropped, they can cause severe damage because of their weight!
- Unfasten the mounting screws of the circuit board (13).
- Remove the 4 screws (14) of the heat sink.
- Pull the circuit board out of its socket.

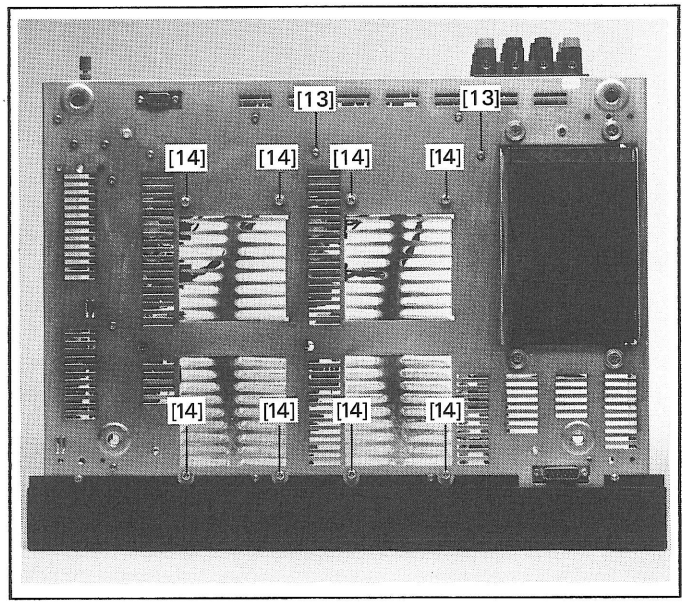


Fig.2.5.

## 2.4.4 PREAMPLIFIER BOARD

- Remove 1 screw (5) on the bottom.
- Separate the plug connection (16) to the INTERCONNECTION UNIT board.
- Pull the circuit board out of its socket from the rear.

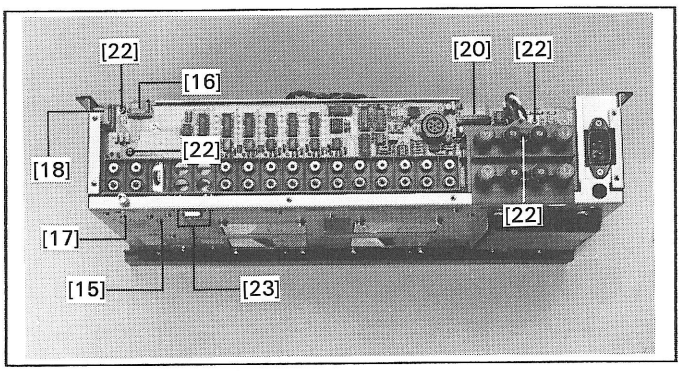


Fig.2.6

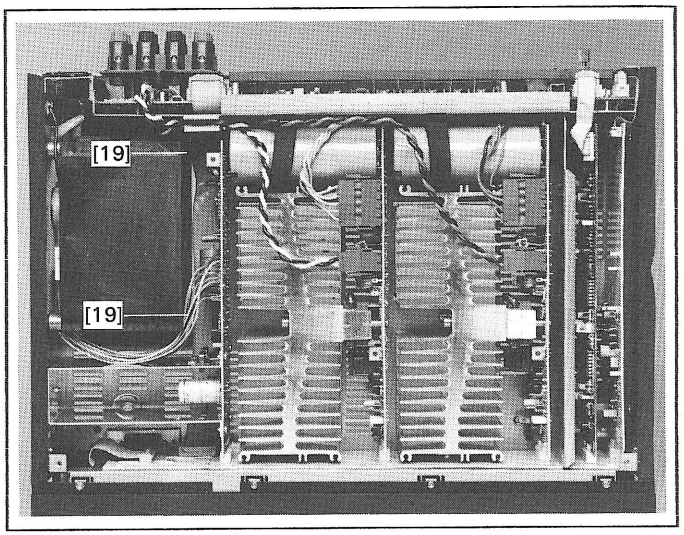


Fig.2.7

## 2.4.5 PHONO UNIT MM

- Unfasten 1 screw (17) on the bottom (Fig. 2.6).
- Separate the plug connection (18) to the INTERCONNECTION UNIT board.
- Pull the circuit board out of its socket from the rear.

## 2.4.6 PHONO UNIT MM+MC CONVERSION KIT 1.725.253

A conversion kit is available for connecting the REVOX B250/B250-S amplifier also to a turntable equipped with moving coil cartridge system.

**Content:**

- PHONO UNIT MC+MM 1.725.250
- Screening plate with two mounting screws

**Installation:**

- The MM+MC module is to be installed in place of the MM circuit board.
- The angular screening plate is mounted to the power transformer.
- Four tapped holes for the screws (19) have been provided on the transformer.

## 2.4.7 INPUT/OUTPUT UNIT

- Separate the three plug connections (16), (18), (20).
- Unplug and expose the two cables (21) to the output stages (Fig. 2.3).
- Unfasten the five mounting screws (22) of the circuit board.
- Unfasten the two screws (23) of the D-type connector on the bottom of the amplifier.
- Hold the circuit board on the speaker terminals, tilt it slightly forward, and slide it out toward the top.

## 2.5 DISASSEMBLING THE FRONT PANEL

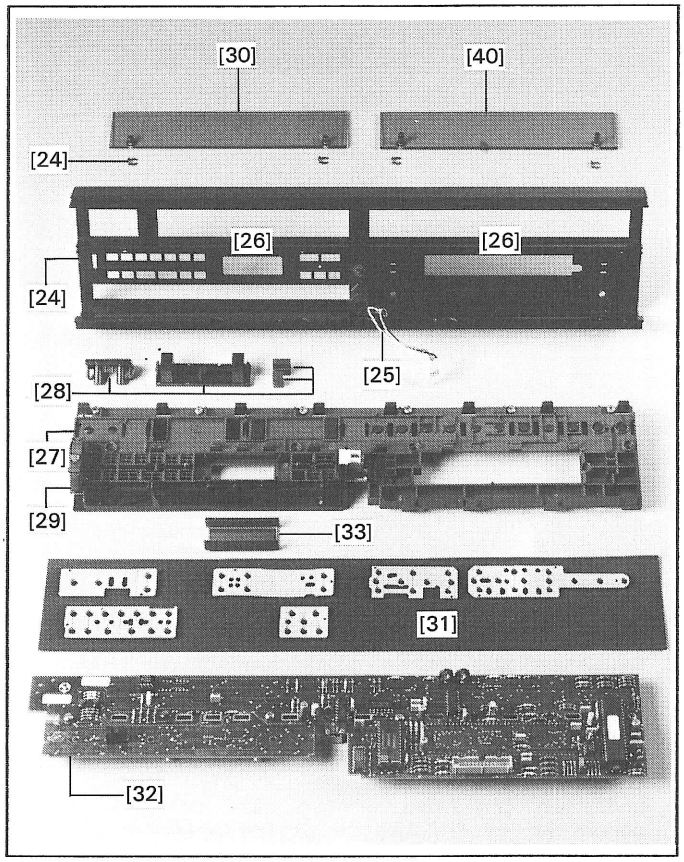


Fig.2.8

### 2.5.1 Front panel parts

- FRONT SECTION (24) with:
  -Headphones socket (25)
  -Built-in protective glass panels (26)

- OPERATING CHASSIS (27) comprising:
  -Removable keys (28)
  -Hinge mechanism (29) for the glass panel (30)
  -Switching mat (31)

MICROPROCESSOR BOARD (32)

**Caution!**

**The LC display (33) can drop out when you remove the MICROPROCESSOR BOARD! The glass piece rests on two conductive rubber strips (34) which in turn rest loosely on the MICROPROCESSOR BOARD (Figs. 2.8, and 2.9).**

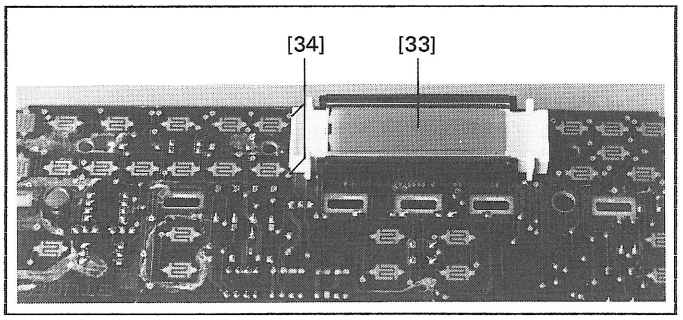


Fig.2.9

### 2.5.2 Removing the front panel

- Unfasten 4 screws (35) on the top of the front panel.
- Unfasten 4 screws (36) on the bottom.
- Pull off the front panel toward the front.
- Separate the plug connections on the MICROCOMPUTER BOARD and pull the plug out of the headphones socket (25).
- For further disassembly, place the front panel on a soft base with the keys facing down.

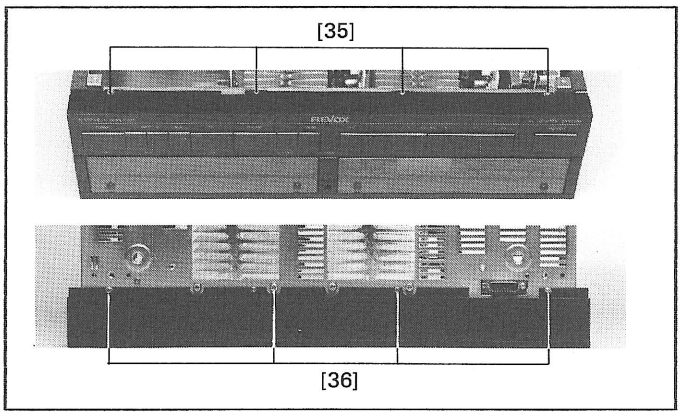


Fig.2.10

## 2.5.3 MICROCOMPUTER BOARD

- Unfasten the screws (37)
- Starting from the outside of the chassis, consecutively pry away all plastic clips (38) from the circuit board so that it can eventually be lifted off.

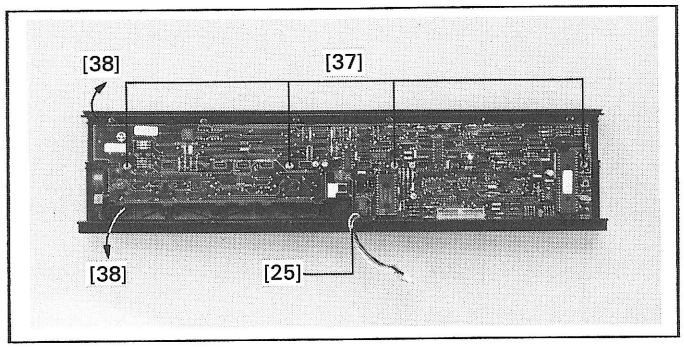


Fig.2.11

**Important:**
After the board has been reinstalled make sure that it is firmly seated. An LC display that indicates only weakly or nothing at all means that this is no longer the case.

### Microcomputer system 1.725.290.81

The following processors are used:

| B250<br>B250-S | to No.5300<br>—— | from No. 5301<br>from No.100001 |
|---|---|---|
| (IC 2) | 1.725.290.05 | 1.725.295.05 |
| Input/Output<br>(IC 1) | 1.725.290.07 | 1.725.290.08 |

If the 1.725.290.05 is replaced by a 1.725.295.05, the connection to pin 19 IC1 must be interrupted.
In addition the following equipment functions must be reprogrammed:

- Sensitivity nominal, store
- Max. volume, store
- Set balance to center position
- Set bass and treble to center position

If the input/output processor is replaced by the version 1.725.290.05, also the equipment processor must be replaced by a type 1.725.295.05. For operation with the B200 controller the amplifier must be equipped with the processors for B250 amplifiers starting with serial number 5301. For amplifiers up to serial number 5300 the rating of resistor R78 must be lowered from 3.3 kohm to 1.8 kohm (microcomputer board) or a 3.9 kohm resistor should be soldered in parallel to R78.

## 2.5.4 Keys

The microcomputer board of the front panel must be removed.
Only for the upper metallic keys is a tool required for removing them from the operating chassis:

- Lift off the corresponding rubber switch mat.
- Introduce a screwdriver perpendicularly into <u>one</u> slot of the desired key.
- Now carefully tilt the screwdriver away from the key to be removed. The key comes lose and drops out completely after this procedure has been repeated with the <u>second</u> slot.

## 2.5.5 Glass panels

- Remove the MICROCOMPUTER board.
- Remove the two circlips (39) of the glass panel to be removed.
- Remove the glass panel together with the circlips from the front.

**Important:**
Do not press against the glass panel visible from the inside. This is not an additional glass panel but the LC display as well as a protection and filter glass of the VF display!

When inserting a new panel make sure that the rubber rings of the circlips are also installed.

## 2.5.6 Operating chassis

- Remove the two glass panels and the microcomputer board.
- Set the front panel on a soft base.
- Separate the operating chassis from the front section (24) by unfastening the six mounting screws (41).

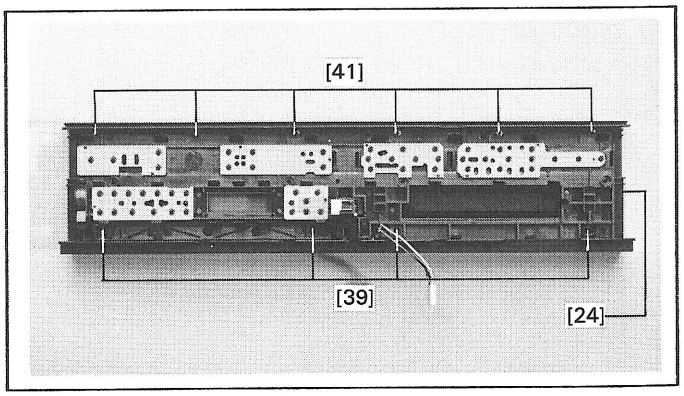


Fig.2.12

## 2.5.7 Hinge mechanism

- If the hinge mechanism is damaged, the dashpot housing (42) must be opened.
- If the dashpot of the hinged cover does not function as desired, the silicon grease in the dashpot housing should be replenished.

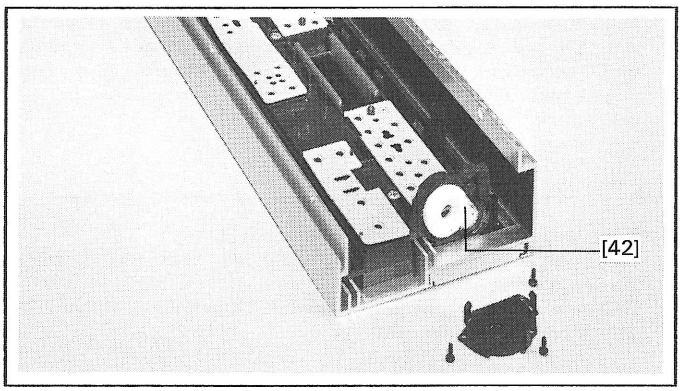


Fig.2.13

# 3. CIRCUIT DESCRIPTION

## 3.1 AUDIO BLOCK DIAGRAM

### Inputs and outputs

The high-level inputs CD, AUX, TAPE 1/2 and TUNER are implemented with an impedance transformer (1) and integrates CMOS switches (2).
The phono inputs (3) MM and MC (option) are connected to a separate board with discrete amplifiers. The input capacitance for the Phono MM can be preset on the slide switch (4) to 50/150/450 pF.
All inputs are connected to the stereo buses (5/6). With the buses (5) the signals are connected via an output impedance transformer (7) to the RECORD output. The outputs TAPE 1/2 are mutually interlocked so that no undesired feedback can occur.
With the bus (6) the signals are connected via an impedance transformer (8) to the monitor output and to the preamplifier where the signal is tapped for measuring the input sensitivity.
The CMOS switches are connected with two 8-bit slide switches (9/10).

### Level controller

The amplifier gain is electronically controlled by a dual DAC (11) (dual digital/analog converter). This circuit produces a maximum gain of +22 dB and a maximum attenuation of -48 dB. To achieve an additional attenuation by -30 dB, a divider (12) is connected to the output of the network. A continuous gain decrease is achieved by floating changeover between DAC and divider. Subsequently the control range of the DAC from 0 to -48 dB again becomes effective. Connecting the divider into the circuit thus produces a maximum attenuation of -78 dB.
This network is controlled by two serially connected 8-bit shift registers (13/14). After the volume control the signal is taken to the tone control stage.

### Tone control stage

The tone control stage is divided into a bass and treble section and can be used as a tone control or as a physiological volume control (loudness). It has been implemented with one active band-pass (15) for low frequencies and one band-pass for high frequencies (16). Both have a bell characteristic.
The control is similar as in the volume control except that two discrete 3-bit DACs are used. With these the low frequencies can be controlled in the resonance range at (40 Hz) from +/- 12 dB while the treble frequencies can be controlled in the resonance range (14 kHz) from +/- 12 dB. The control is implemented with two serially connected shift registers (17/18 dB).
The tone control stage can be bypassed or activated by means of electronic switches (19...22).

### Power amplifier/preamp. output/phones

The signal is subsequently routed via two different paths. The first path leads to the PREAMP OUTPUT, the other to the POWER AMPLIFIER which delivers a maximum of 200 W into 4 ohms.
An NTC resistor (23) serves as sensor (temp. signal) so that the temperature of the output stage can be monitored by the microcomputer control. When the SEPARATED key is actuated, the switches (19/20) open, switch (24) closes, thus disabling the power amplifier.
The speaker outputs A/B (26/27) and the PREAMP OUTPUT (29) can be activated via relays by means of the output selector switches. The headphones output is activated automatically. Its level is attenuated by a voltage divider. The relays are controlled by the shift register (25). The enable of this shift register is generated by the POWER FAIL detector (30) which ensures that after power ON the relays are energized with a delay so that the supply voltages have sufficient time to stabilize.
The relays drop out immediately in the event of a power failure.

## 3.2 BLOCK DIAGRAM OF THE MICROCOMPUTER SYSTEM

### Microcomputer control

The microcomputer system consists of two different microcomputers. Microcomputer (1) is responsible for application-related functions. It controls the I²C bus. It is the master processor. It has exclusive access to the memory chip and performs all control functions.
The Microcomputer (2) is responsible for scanning the keyboard (16) and for controlling the fluorescence display (17).

### Microcomputer (1)

The EEPROM (3) and the LCD driver (4) are selected by the microcomputer (1) directly via the I²C bus. Various information that has been entered via the keyboard is subsequently stored in the EEPROM (3).
The serial interface contains additional chips that are controlled by the microcomputer (1). These are the shift registers (Section 3.1: 9, 10, 13, 14, 17, 18, 25). They are loaded via the serial interface. With the strobes (STR VOLUME, STR SELECT, STR INPUT) the data are read into the latches. The microcomputer also monitors, scans and compares various signals.

## AUDIO BLOCK DIAGRAM (LEFT CHANNEL)

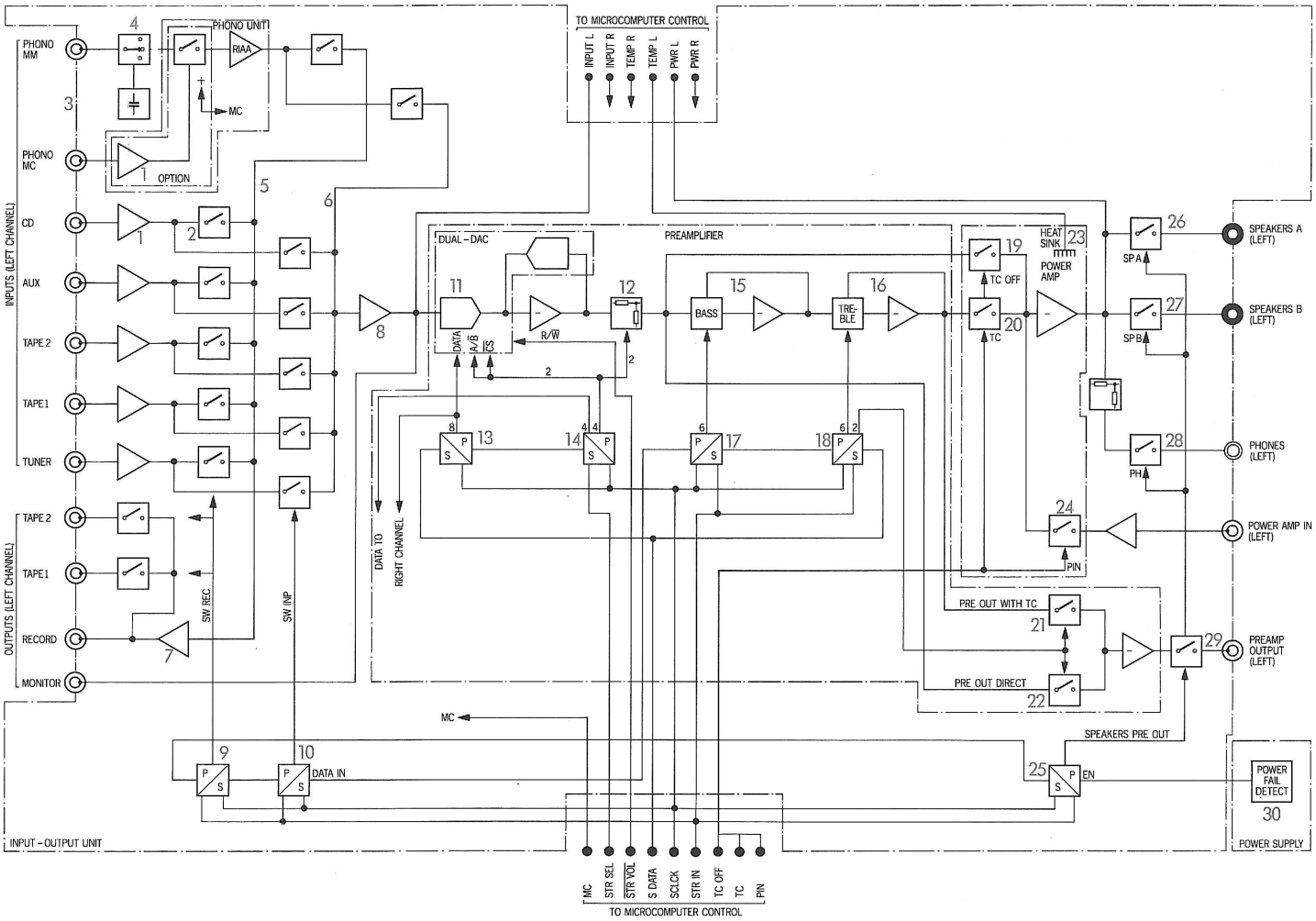


## MICROCOMPUTER SYSTEM

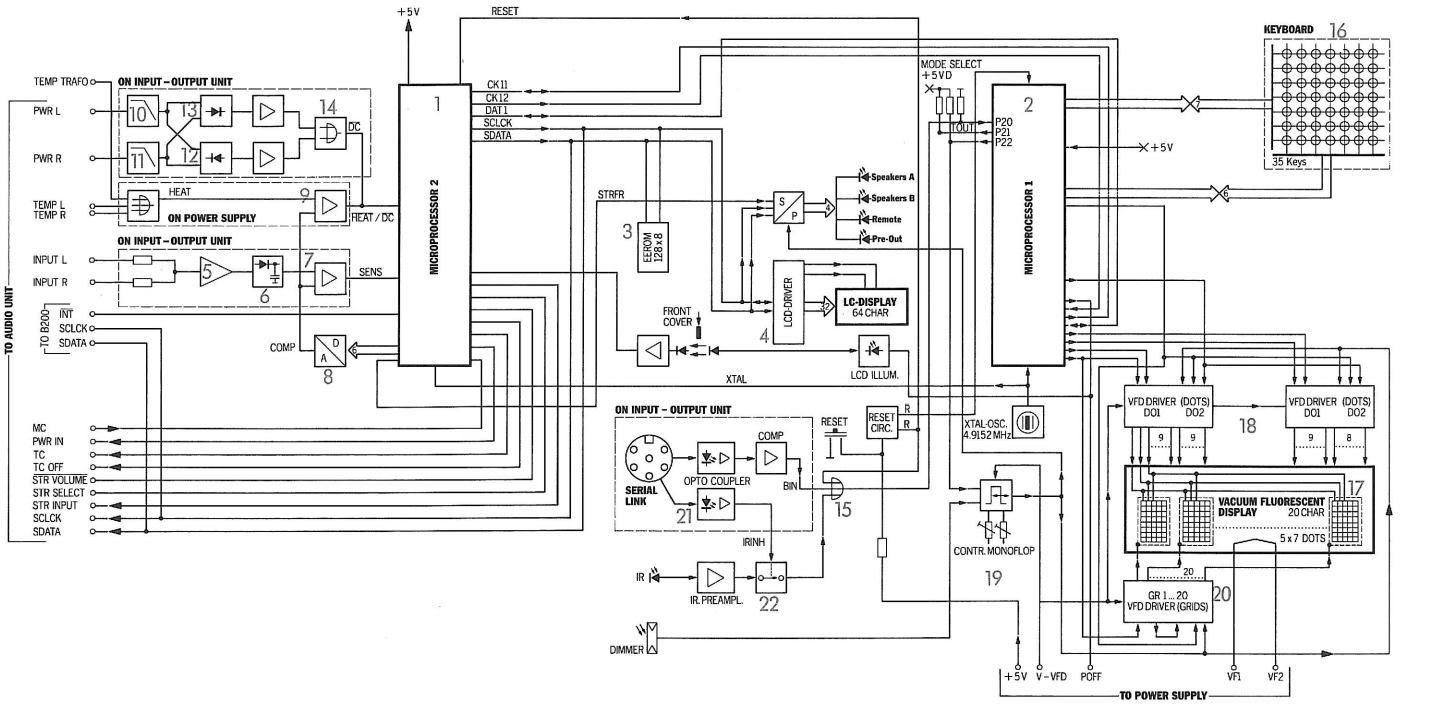

### Sensitivity

The INPUT L/R signals from the INPUT-OUTPUT UNIT are added by the opamp (5) and converted to a DC voltage by a peak responding rectifier (6). This voltage is subsequently evaluated by the microcomputer (1) via the comparator (7), by varying the reference voltage via the DA converter (8) until the latter responds.
The detected input voltage is now compared with the stored NOMINAL SENSITIVITY of 550 mV and the difference is stored in the EEPROM. When the source is changed over the volume controller is readjusted in accordance with the stored difference.

### Heat and DC monitoring

The amplifier is equipped with three temperature sensors (NTC) for PWR L, PWR R, and the transformer. They are connected to the comparator (9). Monitoring consists of 3 phases.
The first threshold is reached when one of the three monitoring voltages exceeds 2.0 V. As a first response the volume is lowered by 10 dB. The symbol (<<<<) appears on the display.
The second threshold is at 2.7 V. This means that the transformer or one of the output stages is overheated (100°C). The wording (OVERLOAD ! ! !) appears on the display and the relays (Section 3.1: 26, 27, 28, 29) drop out immediately.
The third threshold is attained at 4.5 V. This means that a DC voltage is available on the PWR OUTPUTs. This can be detected by connecting the outputs PWR L/R to two low-passes (10, 11) and by converting the signals by means of a negative and a positive peak detector (12, 13) to a DC. The result is taken via an OR gate (14) to the monitoring input of the microcomputer. The latter detects that the highest threshold has been reached. It immediately deenergizes the output relays and the wording (BREAKDOWN ! ! !) is displayed.
The COVER signal indicates whether the hinged cover is open or closed. When the cover is closed the microcomputer cancels any programming operation that has not been completed yet. The COVER signal also has the effect that the LCD backlighting is switched off. The communication between the two microcomputers is based on the so-called handshake process via the lines DAT1, CK11, CK12. The clock pulse is supplied to the microcomputer (1) via a driver from the 4.9152 MHz quartz oscillator of the microcomputer (2).

### Microcomputer (2)

The microcomputer (2) operates in one-chip mode, i.e. its inputs and outputs are connected as ports. After each RESET the microcomputer must be restored to the correct mode.
This is accomplished via the ports P20, P21, P22, Ports P21 and P22 are connected to high via resistors. P20 receives a "high" from the reset IC via an OR gate (15).
Via the various ports it reads the keyboard matrix (16) comprising 29 push button, and also controls the fluorescence display (17).
It also controls the data traffic via the serial link and receives the IR signals. When the amplifier is switched to STAND BY mode the microcomputer (2) shuts down the power supply with the POFF signal.

### Serial link

The data flow between the controller and the microcomputer is routed via a 6-pin DIN socket and an optocoupler (21). The IR input can be disabled by means of an optocoupler. This is accomplished by returning the supply voltage from the controller to the Serial Link socket where the line after the IR preamp is interrupted by the optocoupler (21) with the switch (22).

### Fluorescence display

The DOTs drivers (18) are loaded serially with 10-bit data via four parallel port lines. The microcomputer supplies a blanking pulse via the monoflop (19).
During this blanking interval for the next digit the GRIDs drivers (20) switch, and the corresponding data are read from the DOTs drivers.
The individual digits are changed over with a frequency of 2 kHz. For the individual digits this results in a multiplex frequency of 100 Hz. An LDR (as sensor for the brightness of the ambient light) varies the duration of the dark interval which in turn influences the brightness of the display.

## 3.3 POWER TRANSFORMER

### B250/B250-S

The power supply consists of a transformer equipped with a switch for selecting the line voltage between 100 and 240 VAC.
On the secondary side it has six windings: one for ±16 V with center tap, one for VVFD (+33V), one for +5 V, and one with center tap for heating the vacuum fluorescent display. This heating is interrupted in STANDBY MODE by an electronic switch. The center tap is biased with 6 VDC. For the two POWER AMPLIFIERs L/R there is one winding each with a center tap of 42 VAC plus a supplementary winding of 53 VAC.
The power supply is controlled via the POFF signal. It directly switches the VVFD and the +16 V voltage. The regulators for -16 V and the heater switch are controlled by the +16 V. The +5 V are available also in STANDBY mode (to supply the microcomputer).

### B150

The power transformer is available in three different versions for 110 V, 220 V, and 240 V AC supply. In place of the thermal sensor found in the B250/B250-S there is a thermal switch (120°C) on the primary side.

## MAINS TRANSFORMER B250/B250–S

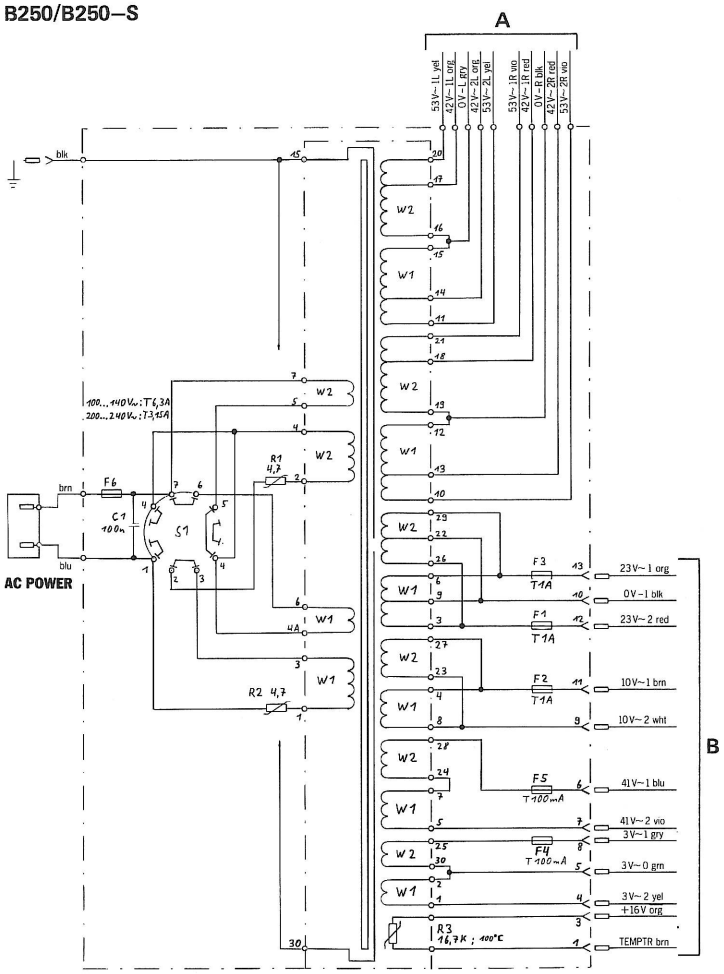


A: TO POWER AMPLIFIER
B: TO POWER SUPPLY UNIT

## MAINS TRANSFORMER B150

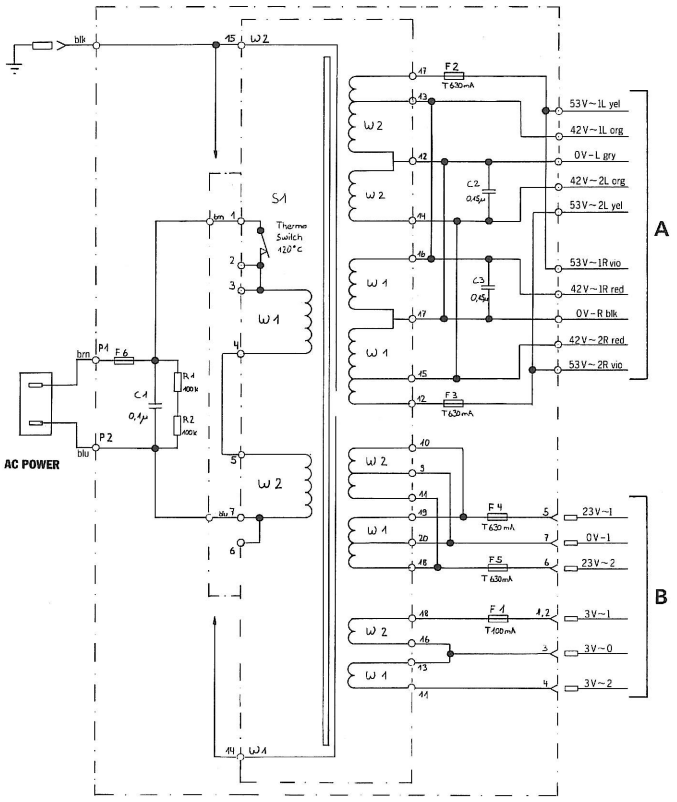


A: TO POWER AMPLIFIER
B: TO POWER SUPPLY UNIT

# 4. ELECTRICAL MEASUREMENTS AND ADJUSTMENTS

## 4.1 MEASURING INSTRUMENTS AND TOOLS

**CAUTION!**
**Shock hazard when the amplifier is open. Certain parts are energized with line voltage.**

- AF voltmeter — Part No. 46020
- Digital voltmeter — On request
- Oscilloscope — On request

## 4.2 PREPARATORY STEPS

- Remove the top cover (Section 2.2.1)

## 4.3 OPERATING VOLTAGES

Operating voltages of the POWER AMPLIFIER:

| Voltage | Pin | Connector L channel | Connector R channel |
|---|---|---|---|
| 53 V | 1 | yellow | violet |
| 53 V | 2 | yellow | violet |
| 42 V | 3 | orange | red |
| 42 V | 4 | orange | red |
| 0 V | 4 | grey | black |

The voltages must be measured individually for both output stages because there are separate transformer windings for each channel.

## 4.4 QUIESCENT CURRENT

- Switch on the amplifier; the quiescent current should be measured at operating temperature. This temperature is reached approx. 10 minutes after power ON.
- Connect the AF voltmeter to the POWER AMPLIFIER:

  TP1 --> +
  TP2 --> -

- Adjust the potentiometer RA91 to obtain a voltage reading of 1 mV.
- Repeat the same adjustment for the second output stage.

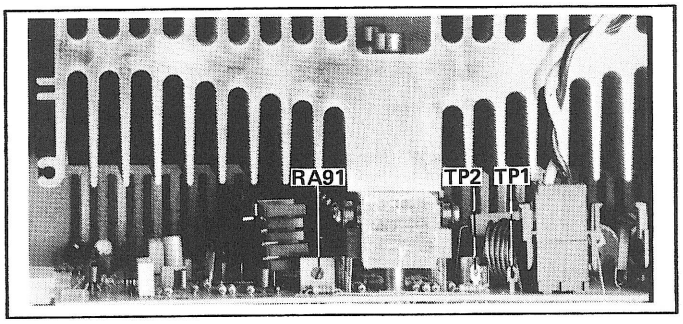

Fig.4.1

## 4.5 BRIGHTNESS CONTROL OF THE VF DISPLAY

The electronics that responds to the brightness of the ambient light can be aligned with the two trimmer potentiometers R67 and R70:

- Detach the front panel so that the two potentiometers become accessible.
- Connect the oscilloscope to ATP1 (IC9 Pin6); Horizontal: 50 µs/div. Vertical: 1 V/div.

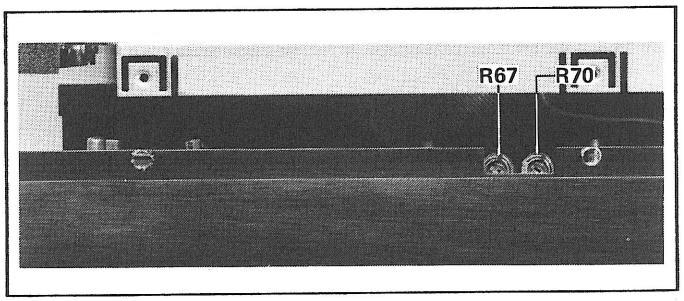

Fig. 4.2

- Turn the potentiometer R67 counterclockwise to the minimum.
- In complete darkness adjust R70 to a pulse duty factor of 9:1.
- Position a yellow light source with an intensity of 20 Lux in front of the left-hand panel near the photoresistor.
- Adjust R67 to a pulse duty factor of 4:1.
- Increase the light intensity to 200 Lux; the pulse duty factor should decrease to less than 1:9.

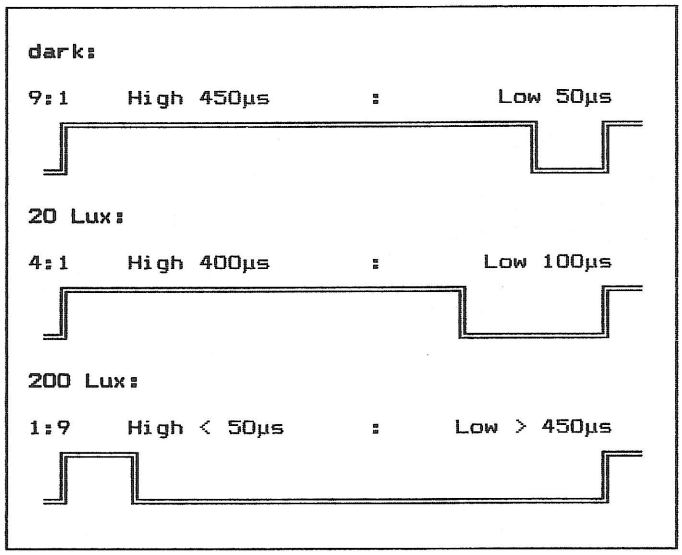


Fig.4.3

Amplifiers with POWER SUPPLY UNIT No. 1.726.230.81 are equipped with an additional trimmer potentiometer RA1. In this case the basic brightness can be adjusted with the aid of a screwdriver without disassembling the amplifier.

Basic setting: RA1 in right-hand limit position
--> Full voltage on the display
--> V-FIP ≈ 36 V

Maximum change: RA1 to left-hand limit position
--> 2/3 V-FIP ≈ 24 V

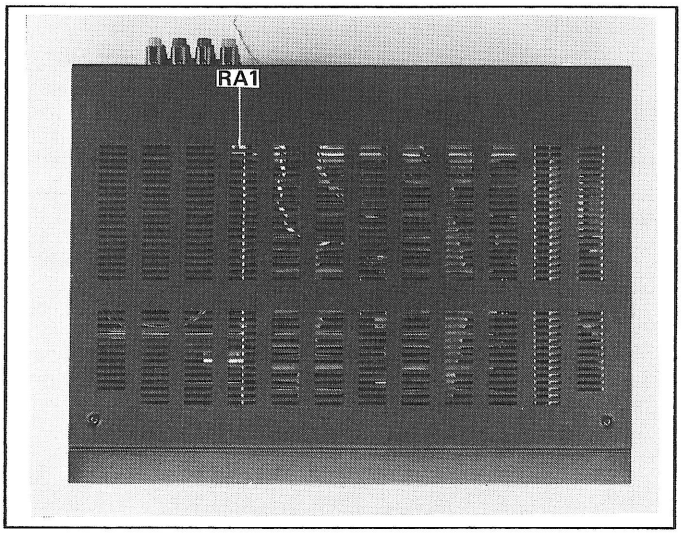


Fig. 4.4

F R A N C A I S

Table des matières Page


| | |
|---|---|
| | Maniement des composants MOS |
| 1. | ELEMENTS DE COMMANDE ET RACCORDS |
| 1.1 | PLAQUE FRONTALE |
| 1.2 | PLAQUE ARRIERE |
| 2. | DEMONTAGE |
| 2.1. | GENERALITES |
| 2.1.1 | Indications |
| 2.1.2 | Outillage nécessaire |
| 2.2 | DEMONTAGE DES COUVERCLES |
| 2.2.1 | Couvercle supérieur |
| 2.2.2 | Couvercles latéraux |
| 2.3 | FUSIBLES |
| 2.4 | DEMONTAGE DU CHASSIS |
| 2.4.1 | Transformateur de réseau |
| 2.4.2 | POWER SUPPLY BOARD |
| 2.4.3 | POWER AMPLIFIER BOARD |
| 2.4.4 | PREAMPLIFIER BOARD |
| 2.4.5 | PHONO UNIT MM |
| 2.4.6 | PHONO UNIT MM+MC CONVERSION KIT |
| 2.4.7 | INPUT/OUTPUT UNIT |
| 2.5 | DEMONTAGE DE LA PARTIE FRONTALE |
| 2.5.1 | Composants de la partie frontale |
| 2.5.2 | Démontage de la partie frontale |
| 2.5.3 | Microcomputer Board |
| 2.5.4 | Touches |
| 2.5.5 | Plaques de verre |
| 2.5.6 | Châssis de commande |
| 2.5.7 | Mécanisme de clapet |
| 3. | DESCRIPTION DES CIRCUITS |
| 3.1 | AUDIO |
| 3.2 | MICROCOMPUTER-SYSTEM |
| 3.3 | TRANSFO RESEAU ET REGLAGE DE TENSION |
| 4. | MESURES ELECTRIQUES ET REGLAGES |
| 4.1 | APPAREILS DE MESURE ET AUXILIAIRES |
| 4.2 | PREPARATIFS |
| 4.3 | TENSION DE SERVICE |
| 4.4 | COURANT DE REPOS |
| 4.5 | COMMANDE DE LUMINOSITE AFFICHAGE VF |
| 5. | SCHEMAS |
| 6. | PIECES DE RECHANGE MECANIQUES |
| 7. | CARACTERISTIQUES TECHNIQUES |

# 1. DESCRIPTION SUCCINCTE DE TOUTES LES FONCTIONS

## 1.1 FACE AVANT

Fonctions télécommandables avec la TELECOMMANDE IR REVOX B208

| [X] | ELEMENT DE COMMANDE | | Fonction |
|---|---|---|---|
| [1] | POWER | » | Interrupteur principal. L'amplificateur est enclenché au dernier mode de service sélectionné. Une nouvelle pression sur la touche met l'amplificateur à nouveau hors tension (veille). |
| [2] | VOLUME + | » | Augmentation de volume. Avec > par pas de 1 dB et avec » par pas de 3 dB. Augmenter le volume à la programmation. |
| [3] | VOLUME – | » | Diminution de volume. Avec < par pas de 1 dB et avec « par pas de 3 dB. Diminuer le volume à la programmation. |
| [4] | OPEN | | Ouvre le cache du second clavier et contient le récepteur IR. Le cache peut être simplement relevé pour fermer. |
| [5] | –20 dB | » | Toute pression sur cette touche diminue le volume de 20 dB. Remise par VOLUME + [2]. |
| [6] | VIDEO | | N'est actif qu'avec l'extension de source REVOX B200 · Controller. Permet la sélection de sources supplémentaires comme TV, VCR 1/2 et DISC. |
| [7] | PHONO | » | Touche de sélection de source pour table de lecture. |
| [8] | CD | » | Touche de sélection de source pour lecteur CD. |
| [9] | AUX | » | Touche de sélection de source pour entrée de réserve. |
| [10] | TAPE 2 | » | Touche de sélection de source pour magnétophone 2. |
| [11] | TAPE 1 | » | Touche de sélection de source pour magnétophone 1. |
| [12] | TUNER | » | Touche de sélection de source pour Tuner. |
| [13] | PRE-OUT | » | La LED signale la sortie enclenchée de préamplificateur PRE-OUT. |
| [14] | REMOTE LED | | La LED signale la réception des signaux de télécommande IR. |
| [15] | Display | | Affichage à 20 chiffres indique l'état de service de l'appareil. |
| [16] | SPEAKERS B LED | | La LED signale l'enclenchement de la sortie haut-parleurs SPEAKERS B. |
| [17] | SPEAKERS A LED | | La LED signale l'enclenchement de la sortie haut-parleurs SPEAKERS A. |
| [18] | PHONES | | Prise de raccordement pour casque. |
| [19] | REC-OUT | | La source d'enregistrement ne correspond pas à la source écoutée. L'affichage [15] change le mode d'indication par exemple à: IN:TUNER REC:TAPE 1. |
| [20] | MC | | Sélection du préamplificateur PHONO pour bobine mobile lorsque l'option MC est installée, autrement inactif. |
| [21] | SEPARATED | | Séparation du préamplificateur et de l'amplificateur final, par exemple pour intercaler un correcteur. |
| [22] | MAX VOLUME | | Commute en mode de programmation pour l'introduction du volume maximal (MAX VOLUME) des différentes sorties et du volume d'enclenchement (PWR ON-VOLUME). |

| | | | |
|---|---|---|---|
| [23] | REC=IN | | La source d'enregistrement correspond à la source écoutée. L'affichage [15] change le mode d'indication à: source de signal, volume et réglage de balance. |
| [24] | Affichage LC | | Affichage multifonctionnel pour BASS, TREBLE, MAX VOLUME, SENSITIVITY, etc. |
| [25] | BASS – | » | Diminue le niveau des fréquences basses. A la première pression, le réglage actuel est affiché. |
| [26] | SENSITIVITY | | Commute en mode de programmation pour l'introduction d'un décalage de volume en faveur d'une sortie et de la sensibilité (SENSITIVITY) des entrées. |
| [27] | BASS + | » | Augmente le niveau des fréquences basses. A la première pression, le réglage actuel est affiché. |
| [28] | LOUDN | | Enclenche et déclenche l'élévation des fréquences basses en fonction du volume à faible niveau (fonction LOUDNESS). |
| [29] | TONE | » | Enclenche et déclenche le réglage de tonalité (BASS, TREBLE). |
| [30] | BALANCE L | » | Décale le niveau de sortie en faveur du canal gauche. |
| [31] | TREBLE – | » | Diminue le niveau des fréquences élevées. A la première pression, le réglage actuel est affiché. |
| [32] | BALANCE R | » | Décale le niveau de sortie en faveur du canal droit. |
| [33] | TREBLE + | » | Augmente le niveau des fréquences élevées. A la première pression, le réglage actuel est affiché. |
| [34] | PRE-OUT | » | Enclenche et déclenche la sortie du préamplificateur PRE-AMP. |
| [35] | SPEAKERS A | » | Enclenche et déclenche le groupe haut-parleurs SPEAKERS A. |
| [36] | STORE | | Touche de mémorisation. Termine une programmation avec MAX VOLUME ou SENSITIVITY (sauf SENSITIVITY INPUT). En fermant le cache, on peut interrompre à tout moment une programmation sans mémorisation. |
| [37] | SPEAKERS B | » | Enclenche et déclenche le groupe haut-parleurs SPEAKERS B. |

## 1.2 ARRIERE

| [X] | ELEMENT | Fonction |
|---|---|---|
| [38] | PHONO MC | Prises d'entrée (CINCH) pour une table de lecture à système de lecture à bobine mobile (option). |
| [39] | | Raccord de masse pour le tourne-disque. |
| [40] | PHONO MM | Prises d'entrée (CINCH) pour une table de lecture à système de lecture à aimant mobile. |
| [41] | PF | Commutateur d'adaptation de la capacité d'entrée PHONO MM à celle de la table de lecture. |
| [42] | CD | Prises d'entrée (CINCH) pour un lecteur CD. |
| [43] | AUX | Prises d'entrée (CINCH) pour une source de signal supplémentaire (entrée de réserve). |
| [44] | TAPE 2 | Prises d'entrée (CINCH) pour reproduction depuis le magnétophone 2. |
| [45] | TAPE 1 | Prises d'entrée (CINCH) pour reproduction depuis le magnétophone 1. |
| [46] | TUNER | Prises d'entrée (CINCH) pour un tuner (récepteur). |
| [47] | PWR-AMP | Prises d'entrée (CINCH) pour le raccordement direct aux étages de puissance. |
| [48] | MONITOR | Prises de sortie (CINCH) à niveau fixe pour amplificateur supplémentaire. |
| [49] | TAPE 2 | Prises de sortie (CINCH) pour enregistrements sur le magnétophone 2. |
| [50] | TAPE 1 | Prises de sortie (CINCH) pour enregistrements sur le magnétophone 1. |
| [51] | RECORD | Prises de sortie (CINCH) pour un canal supplémentaire d'enregistrement (troisième magnéto-phone). |
| [52] | SERIAL LINK | Raccord sériel de commande pour raccordement d'un récepteur IR externe REVOX B206. Par cette prise, on peut également couper le récepteur IR interne (relier la broche 1 à la broche 2 et la broche 4 à la broche 5). |
| [53] | PRE-AMP | Prises de sortie (CINCH) pour raccordement d'enceintes actives (sortie du préamplificateur). |
| [54] | SPEAKERS A | Bornes haut-parleur pour le groupe A. |
| [55] | SPEAKERS B | Bornes haut-parleur pour le groupe B. |
| [56] | AC POWER | Raccord réseau. |

## B150

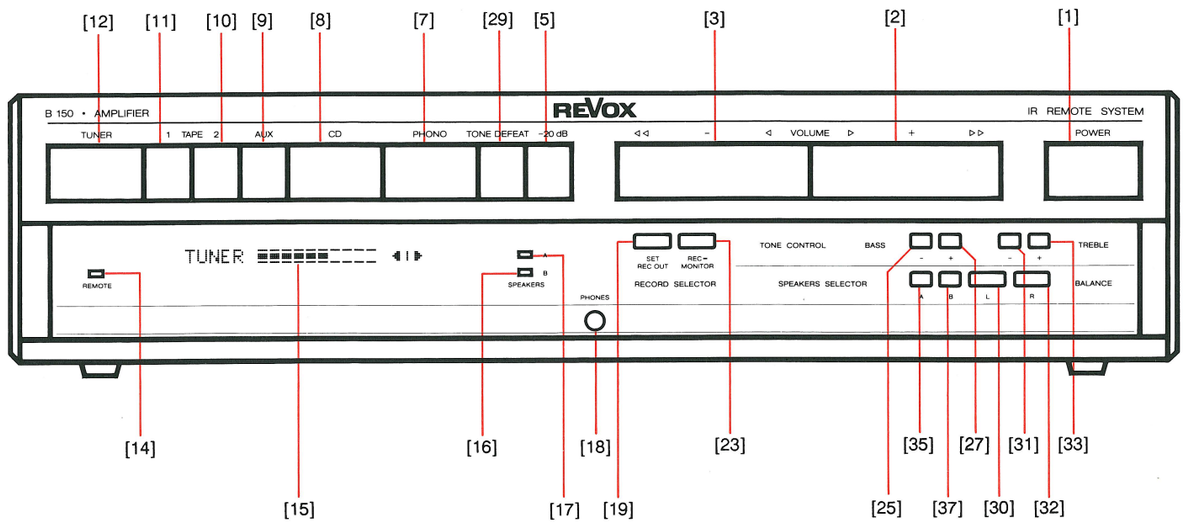


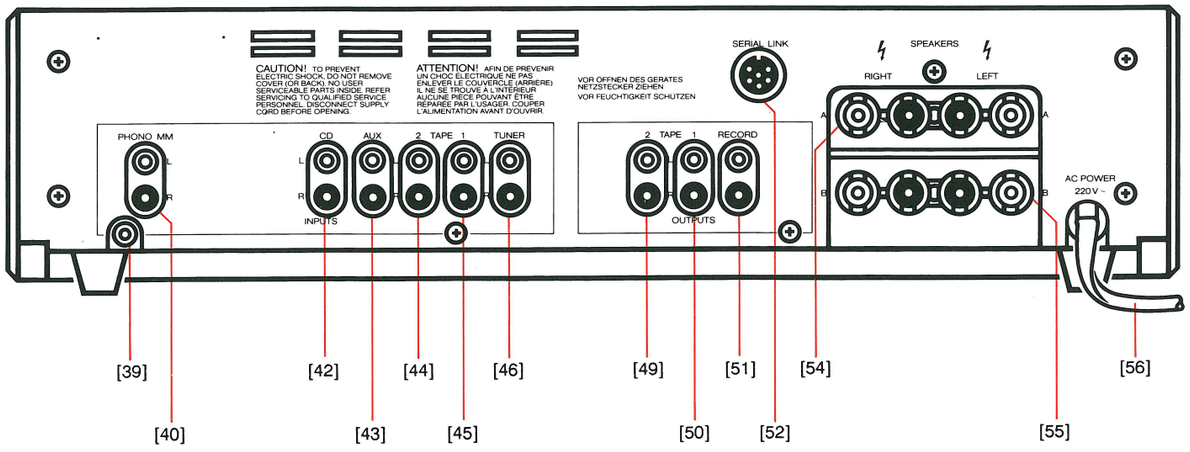


## B250 (B250–S)

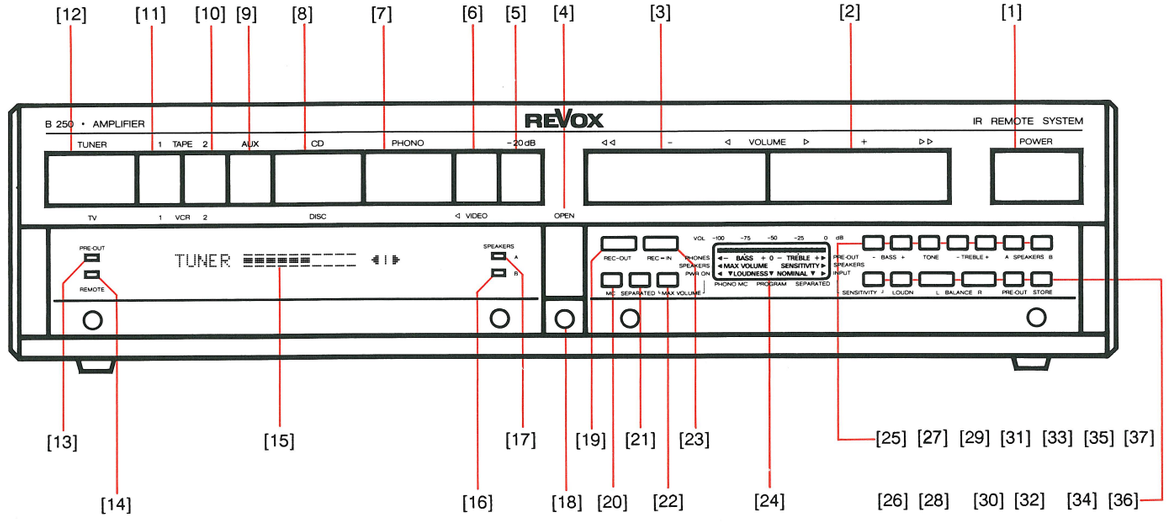


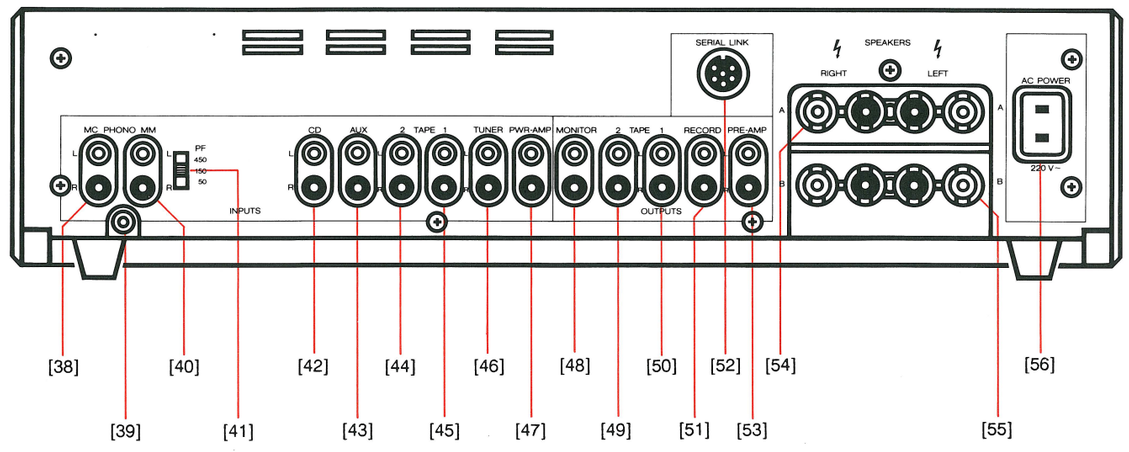

# 2. DEMONTAGE

## 2.1 GENERALITES

### 2.1.1 Remarques

**Attention:**
Avant d'ouvrir l'appareil
retirer la fiche du réseau!

- Lors du montage et du démontage de composants électroniques, il convient d'observer les directives données au début de ces instructions sur le maniement des composants MOS.
- La place de travail doit avoir une surface douce pour éviter les égratignures sur la plaque frontale.

### 2.1.2 Outillage nécessaire

| | | |
|---|---|---|
| 1 | tournevis cruciforme | grandeur 0 |
| 1 | tournevis cruciforme | grandeur 1 |
| 1 | tournevis cruciforme | grandeur 2 |
| 1 | tournevis | grandeur 1 |
| 1 | tournevis | grandeur 2 |

1 équipement de poste de travail "ESE" no. comm. 46200

## 2.2 DEMONTAGE DES COUVERCLES

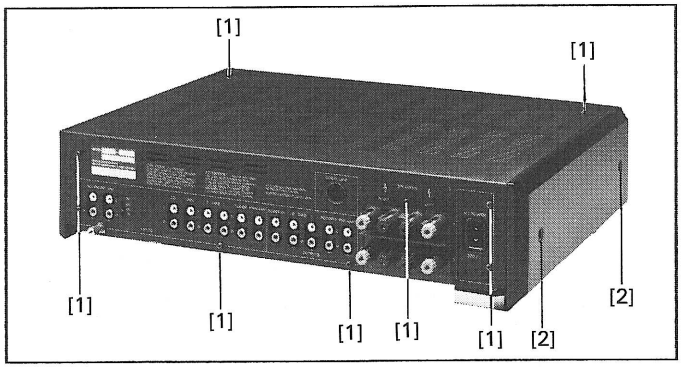


Fig.2.1

### 2.2.1 Couvercle supérieur

- Retirer 9 vis (1) à l'avant et à l'arrière (Fig.2.1).
- Glisser le couvercle légèrement en arrière et le retirer.

### 2.2.2 Couvercles latéraux

- Desserrer chaque fois 2 vis (2) (Fig.2.1.).

## 2.3 FUSIBLES

- Retirer la fiche du réseau!
- Retirer le couvercle supérieur comme indiqué
- Retirer le couvercle blanc en matière synthétique en le tournant
- Remplacer les fusibles défectueux:

**B250, B250-S:**

- **Primaire:**
  F6 avec protection anticontact
  100...140 V --> T 6,3 A
  200...240 V --> T 3,15A

- **Secondaire:**
  F1, F2, F3 --> T 1 A
  F4 --> T 100mA
  F5 --> T 315mA

**B150:**

- **Primaire:**
  F6 avec protection anticontact
  110 V --> T 5 A
  220/240 V --> T 2,5A

- **Secondaire:**
  F1 --> T 100mA
  F2, F3, F4, F5 --> T 630mA

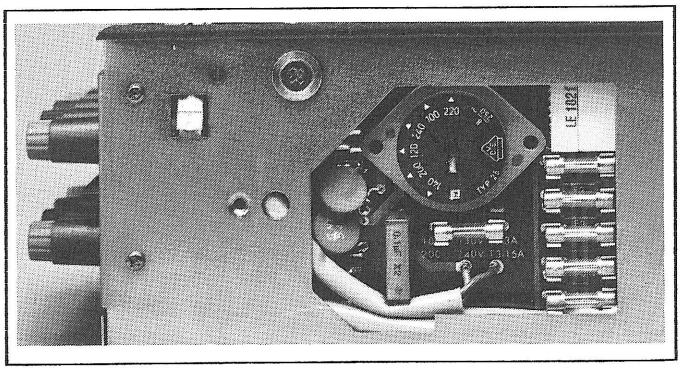

Fig.2.2

## 2.4 DEMONTAGE DU CHASSIS

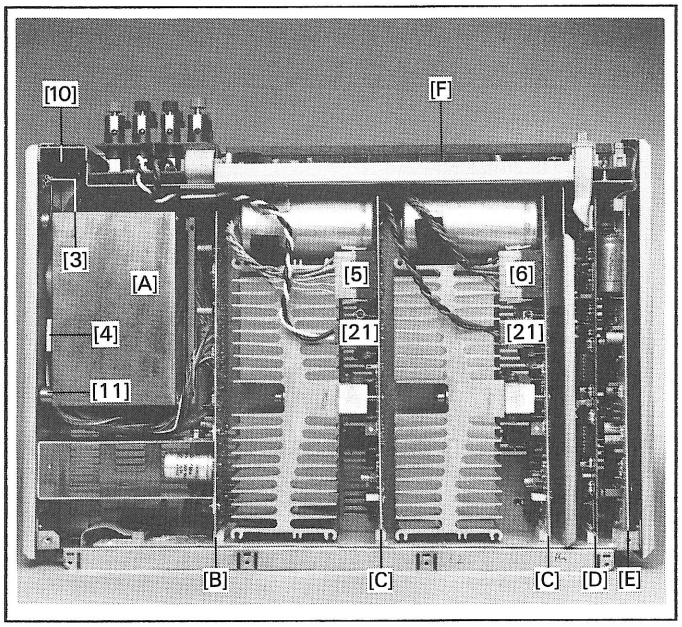


Fig.2.3

A: Transfo réseau
B: Power Supply
C: Power Amplifier
D: Preamplifier
E: Phono Unit
F: Input/Output Unit

### 2.4.1 Transfo réseau

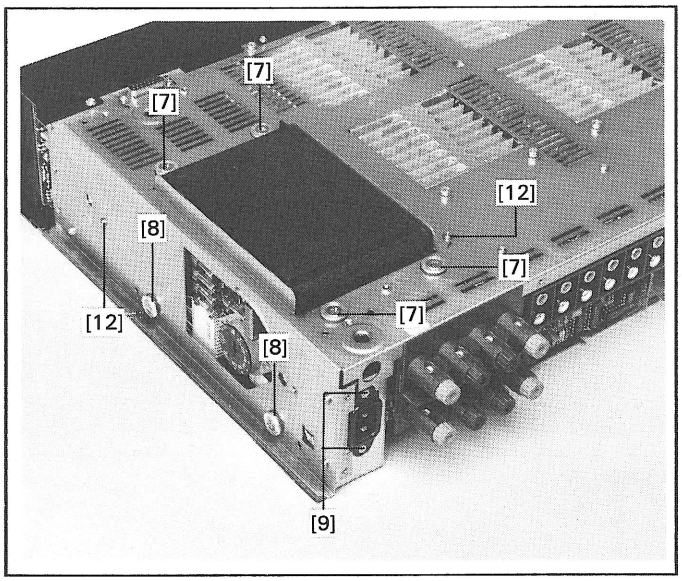


Fig.2.4

- Retourner l'appareil et le poser sur la face supérieure
- Desserrer 4 vis avec rondelles (7) sur la face inférieure
- Poser l'appareil à nouveau sur ses pieds
- Retirer les deux vis (9) de la prise réseau (10); rentrer celle-ci par l'ouverture pratiquée dans l'appareil
- Défaire les connexions (3, 4, 5, 6).
- Retirer les deux vis (8) et sortir les goujons d'écartement en laiton (11).
- Saisir le transfo des deux mains et le sortir lentement de l'appareil. Ne pas perdre les écrous carrés du transfo.

Lors du montage, il faut veiller à ce que les câbles suivent le même tracé qu'avant le démontage.

### 2.4.2 POWER SUPPLY BOARD

- Retirer une vis (12) sur la face inférieure et sur le côté gauche du châssis de l'appareil.
- Retirer la platine de l'embase en tirant vers l'arrière.

### 2.4.3 POWER AMPLIFIER BOARD

- Poser l'appareil sans couvercles; le côté droit devient la face d'appui.
  Maintenir l'appareil et l'étage final d'une main de manière que l'étage final à démonter ne puisse se déplacer.
  Risque de casse en raison du poids des pièces!
- Desserrer la vis de fixation de la platine (13).
- Retirer les 4 vis (14) de la tôle de refroidissement.
- Retirer la platine de l'embase.

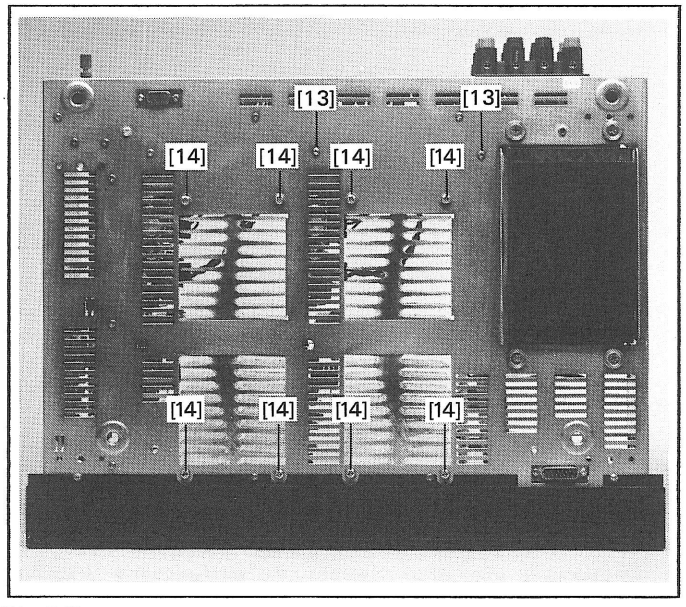


Fig.2.5.

## 2.4.4 PREAMPLIFIER BOARD

- Retirer 1 vis (15) sur la face inférieure.
- Détacher la connexion (16) vers la platine INTERCONNECTION UNIT.
- Retirer la platine de l'embase en tirant vers l'arrière.

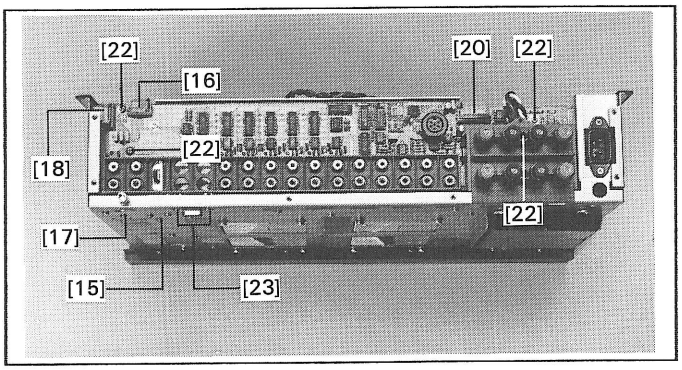


Fig.2.6

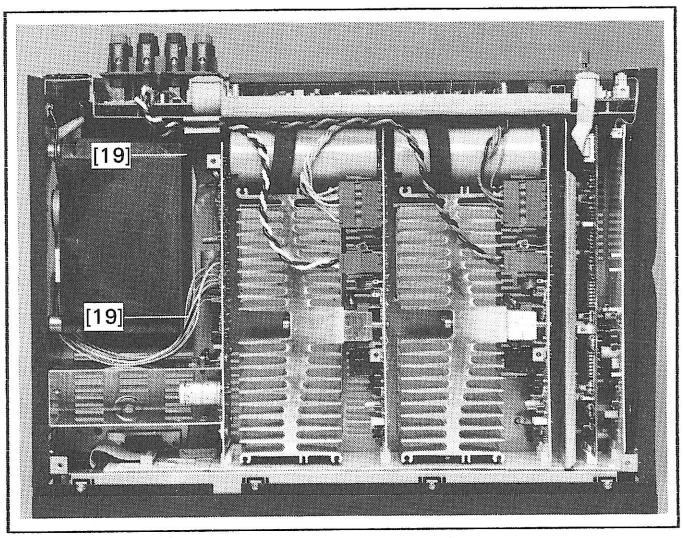


Fig.2.7

## 2.4.5 PHONO UNIT MM

- Retirer 1 vis (17) sur la face inférieure (Fig.2.6).
- Détacher la connexion (18) vers la platine INTERCONNECTION UNIT.
- Retirer la platine de l'embase en tirant vers l'arrière.

## 2.4.6 PHONO UNIT MM+MC CONVERSION KIT1.725.253

La société de vente propose un jeu de transformation permettant d'utiliser en supplément sur l'amplificateur REVOX B250/B250-S un tourne-disque avec tête de lecture à bobine mobile.

**Contenu:**

- PHONO UNIT MC+MM 1.725.250
- Tôle de blindage avec 2 vis de fixation

**Montage:**

- Le module MM+MC doit être monté à la place de la platine MM
- La tôle coudée se fixe sur le transfo de réseau.
- Quatre perforations (19) pour les vis sont prévues sur le côté du transformateur.

## 2.4.7 INPUT/OUTPUT UNIT

- Retirer les trois connexions (16), (18), (20).
- Sortir les deux câbles (21) vers les étages finaux et dégager (Fig.2.3).
- Retirer les cinq vis de fixation (22) de la platine.
- Sur la face inférieure de l'appareil, retirer les deux vis (23) de la fiche type D.
- Rabattre légèrement la platine en avant en tenant les bornes de haut-parleur, soulever et sortir vers le haut.

## 2.5 DEMONTAGE DE LA PARTIE FRONTALE

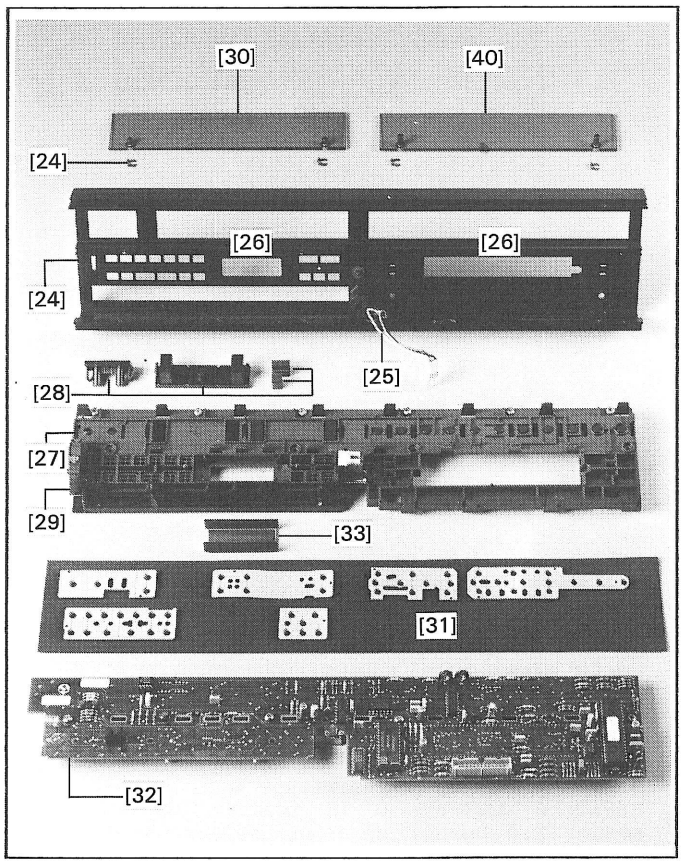


Fig.2.8

### 2.5.1 Composants de la partie frontale

- PROFILE FRONTAL (24) avec:
  -prise casque (25)
  -verres de protection de l'affichage (26)

- CHASSIS DE COMMANDE (27) avec:
  -touches amovibles (28)
  -mécanisme à clapet (29) pour le verre de recouvrement (30)
  -tapis de contact (31)

- MICROPROCESSOR BOARD (32)

**Attention!**

Lors du démontage du MICROPROCESSOR BOARD, le LC-Display (33) risque de tomber! Il se compose d'un petit morceau de verre et est posé sur deux bandes de caoutchouc conducteur (34) posées à leur tour sur le MICROPROCESSOR BOARD (Fig.2.8, Fig.2.9).

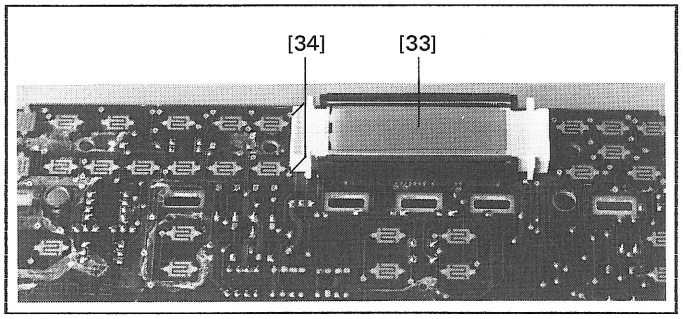


Fig.2.9

### 2.5.2 Démontage de la partie frontale

- Retirer 4 vis (35) sur la face supérieure de la partie frontale.
- Desserrer 4 vis (36) sur la face inférieure.
- Retirer la partie frontale vers l'avant.
- Détacher la connexion sur le MICROCOMPUTER BOARD et retirer la fiche de la prise casque (25).
- Pour la suite du démontage, poser la partie frontale, les touches en bas, sur une surface douce.

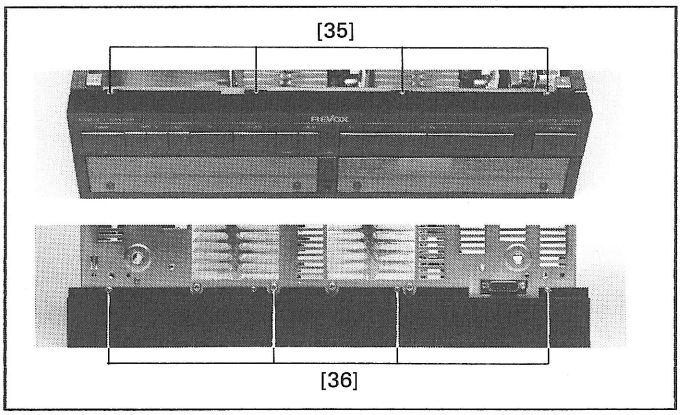


Fig.2.10

## 2.5.3 MICROCOMPUTER BOARD

- Desserrer les vis (37).
- En commençjant dehors sur le châssis de commande, écarter l'une après l'autre légèrement de la platine toutes les languettes de matière synthétique (38). En même temps, soulever celle-ci jusqu'à ce qu'on puisse la retirer complètement.

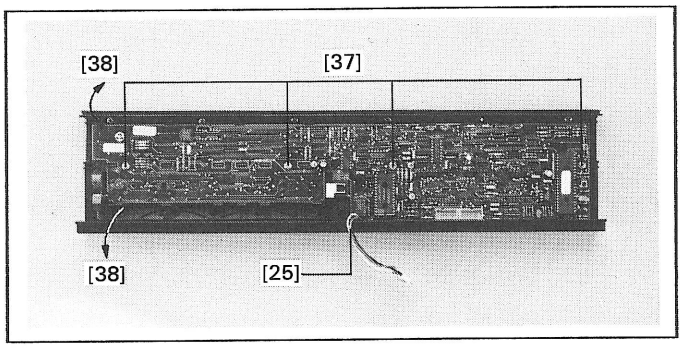


Fig.2.11

**Important:**
Après le montage, la platine doit avoir à nouveau une assise stable. Un affichage LC pas ou presque pas allumé indique que ce n'est pas le cas.

## Microcomputer System 1.725.290.81

Les processeurs suivants sont installés:

| B250<br>B250-S | to No.5300<br>—— | from No. 5301<br>from No.100001 |
|---|---|---|
| (IC 2) | 1.725.290.05 | 1.725.295.05 |
| Input/Output<br>(IC 1) | 1.725.290.07 | 1.725.290.08 |

Si le processeur d'appareil 1.725.295.05 est monté à la place du 1.725.290.05, le raccord broche 19 de IC 1 doit être coupé.
En outre les fonctions suivantes doivent être reprogrammées:

- Sensitivity Nominal, Store
- Max. Volume, Store
- Mettre la balance au milieu
- Mettre graves et aigus au milieu

Si le processeur entrée/sortie est remplacé par la version 1.725.290.05, le processeur d'appareil doit également être remplacé par le type 1.725.295.05. Pour l'utilisation avec le contrôleur B200, l'appareil doit contenir les processeurs dès le numéro de série B250 5301. Pour les amplificateurs portant les numéros de série jusqu'à 5300, la résistance R78 doit être réduite de 3,3 kΩ à 1,8 kΩ (Microprocessor Board) ou il faut souder une résistance de 3,9 kΩ en parallèle sur R78.

## 2.5.4 Touches

La platine de microprocesseur doit être retirée de la partie frontale.
Seules les touches supérieures métalloïdes nécessitent un outil pour être dégagées du châssis de commande.

- Retirer le tapis caoutchouc correspondant
- Introduire un tournevis verticalement dans l'une des fentes de la touche voulue.
- Ecarter légèrement le manche du tournevis de la touche à démonter. Celle-ci se détache un peu et tombe complètement dès que l'on a répété l'opération sur la seconde fente de la touche.

## 2.5.5 Plaques de verre

- Démonter la platine de microprocesseur
- Retirer les deux arrêts (39) du verre à démonter.
- Sortir le verre en avant avec les deux arrêts.

**Attention:**
Ne tenter en aucun cas de presser de l'intérieur le verre visible. Il ne s'agit pas d'un verre supplémentaire mais de l'affichage à cristaux liquides ainsi que d'un verre de protection et de filtrage pour l'affichage.

En montant le nouveau verre, veiller à ce que les rondelles de caoutchouc ne manquent pas.

## 2.5.6 Châssis de commande

- Démonter les deux plaques de verre et la platine microprocesseur.
- Poser la partie frontale sur un support doux.
- En desserrant les 6 vis de fixation (41), séparer le châssis de commande de la plaque frontale (24).

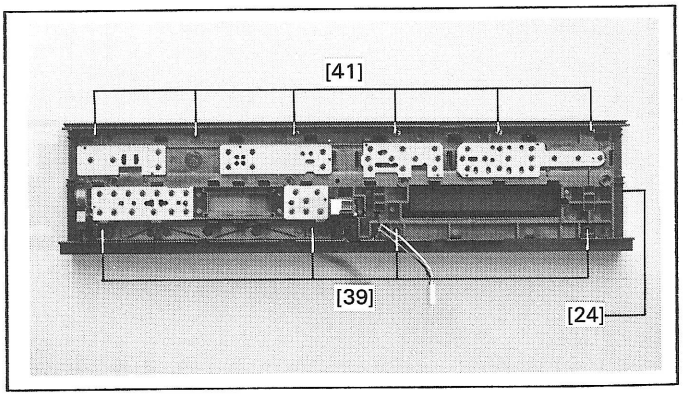


Fig.2.12

## 2.5.7 Mécanisme de clapet

- Si le mécanisme est endommagé, il faut ouvrir le boîtier amortisseur (42).
- Si l'amortisseur ne fonctionne pas comme il convient, remplir le boîtier de graisse silicone.

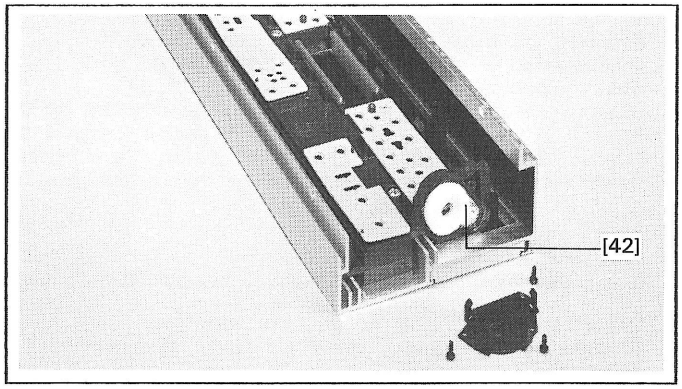


Fig.2.13

# 3. DESCRIPTION DES CIRCUITS

## 3.1 SCHEMA-BLOC AUDIO

### Entrées et sorties

Les entrées à haut niveau CD, AUX, TAPE 1/2 et TUNER sont réalisées au moyen d'un convertisseur d'impédance (1) et de commutateurs CMOS intégrés (2). Les entrées Phono (3) MM und MC (option) sont bouclées sur une platine séparée à amplificateurs de construction discrète. La capacité d'entrée pour le phono MM peut être présélectionnée avec le commutateur (4) à 50/150/450 pF. Toutes les entrées aboutissent aux barres collectrices stéréo (5/6). Par la barre collectrice (5), les signaux sont appliqués par un convertisseur d'impédance de sortie (7) à la sortie RECORD. Les sorties TAPE 1/2 sont verrouillées mutuellement pour éviter toute réaction indésirable. La barre collectrice (6) applique les signaux par l'intermédiaire d'un convertisseur d'impédance (8) à la sortie monitor et au préamplificateur. De là, le signal est également pris pour la mesure de la sensibilité d'entrée. Les commutateurs CMOS sont réalisés avec deux registres à décalage 8 bits (9/10).

### Réglage de niveau

Le niveau d'amplification est réglé électroniquement par un Dual DAC (11) (Dual Digital/Analog Converter). Ce circuit permet un gain maximal de +22 dB et un affaiblissment de -48 dB. Pour pouvoir augmenter encore l'affaiblissement de -30 dB, le réseau est suivi d'un diviseur (12). La diminution continue est obtenue par commutation lente du DAC et du diviseur. Ensuite, c'est de nouveau la plage de réglage du DAC de 0 à - 48 dB qui joue. L'adjonction du diviseur donne donc un affaiblissement maximal de -78 dB.
La commande de ce réseau est réalisée par deux registres à décalage 8 bits en série (13/14). Après le réglage de volume, le signal passe à l'étage de réglage de tonalité.

### Etage de réglage de tonalité

Cet étage est partagé en graves et aigus et peut être utilisé au choix comme réglage de volume proprement dit (Tone Control) ou physiologique (Loudness). Il est réalisé au moyen d'un passe-bande actif (15) pour les graves et d'un autre pour les aigus (16). Tous deux ont une caractéristique en cloche.
Le réglage se fait de manière analogue à celui du volume, sauf que l'on utilise deux DAC 3 bits discrets permettant un réglage des fréquences basses dans la plage de résonance (40 Hz) de +/-12 dB et un réglage des fréquences élevées de la plage supérieure (14kHz) de +/- 12 dB. La commande est assurée par deux registres à décalage en série (17/18).
Des commutateurs électroniques (19...22) permettent de ponter l'étage ou de le boucler.

### Amplificateur de puissance/sortie préampli/casque

Le signal poursuit son chemin par deux voies différentes.
D'une part vers PREAMP OUTPUT, d'autre part au POWER AMPLIFIER, d'une puissance maximale de 200W sur 4Ω.
Une résistance CTN (23) sert de transmetteur (Signal Temp.) pour la surveillance de température de l'étage final par la commande à microprocesseur. En actionnant la touche SEPARATED, les commutateurs (19/20) s'ouvrent, le commutateur (24) se ferme, ce qui fait que POWER AMP INPUT est activé.
Les trois sélecteurs de sortie permettent de commuter par des relais les sorties haut-parleurs A/B (26/27) et PREAMP OUTPUT (29). La sortie casque s'enclenche automatiquement. Elle est atténuée par un diviseur de tension. Les relais sont commandés par le registre à décalage (25). L'Enable de ce registre est donné par le POWER FAIL Detector (30) qui veille, lors du branchement au réseau, à ce que les relais soient enclenchés avec un certain retard afin que les tensions d'alimentation aient le temps de se stabiliser. En cas de coupure de réseau, les relais retombent immédiatement.

## 3.2 SCHEMA-BLOC SYSTEME MICROORDINATEUR

### Microcomputer Control

Le système micro-ordinateur se compose de deux micro-ordinateurs différents. Le micro-ordinateur (1) est responsable des tâches spécifiques à l'application. Il gère le bus I²C. C'est le Master Processor. Il a accès exclusif au composant mémoire et assure tout le travail de commande.
Le micro-ordinateur (2) est responsable de l'interrogation du clavier (16) et de la commande de l'affichage à fluorescence (17).

### Micro-ordinateur (1)

L'EEPROM (3) et le LCD-Driver (4) sont sélectionnés directement par le micro-ordinateur (1) au travers du bus I²C. Diverses informations introduites au clavier sont ensuite mémorisées dans l'EEPROM (3).
L'interface sérielle comporte encore d'autres composants commandés par le micro-ordinateur (1): registres à décalage (chap. 3.1: 9, 10, 13, 14, 17, 18, 25) qui sont chargés par l'interface sérielle. Avec les Strobes (STR VOLUME, STR SELECT, STR INPUT) les données sont reprises dans les Latches.
Les autres tâches de ce micro-ordinateur comportent la surveillance ou l'interrogation et la comparaison de signaux.

## AUDIO BLOCK DIAGRAM (LEFT CHANNEL)

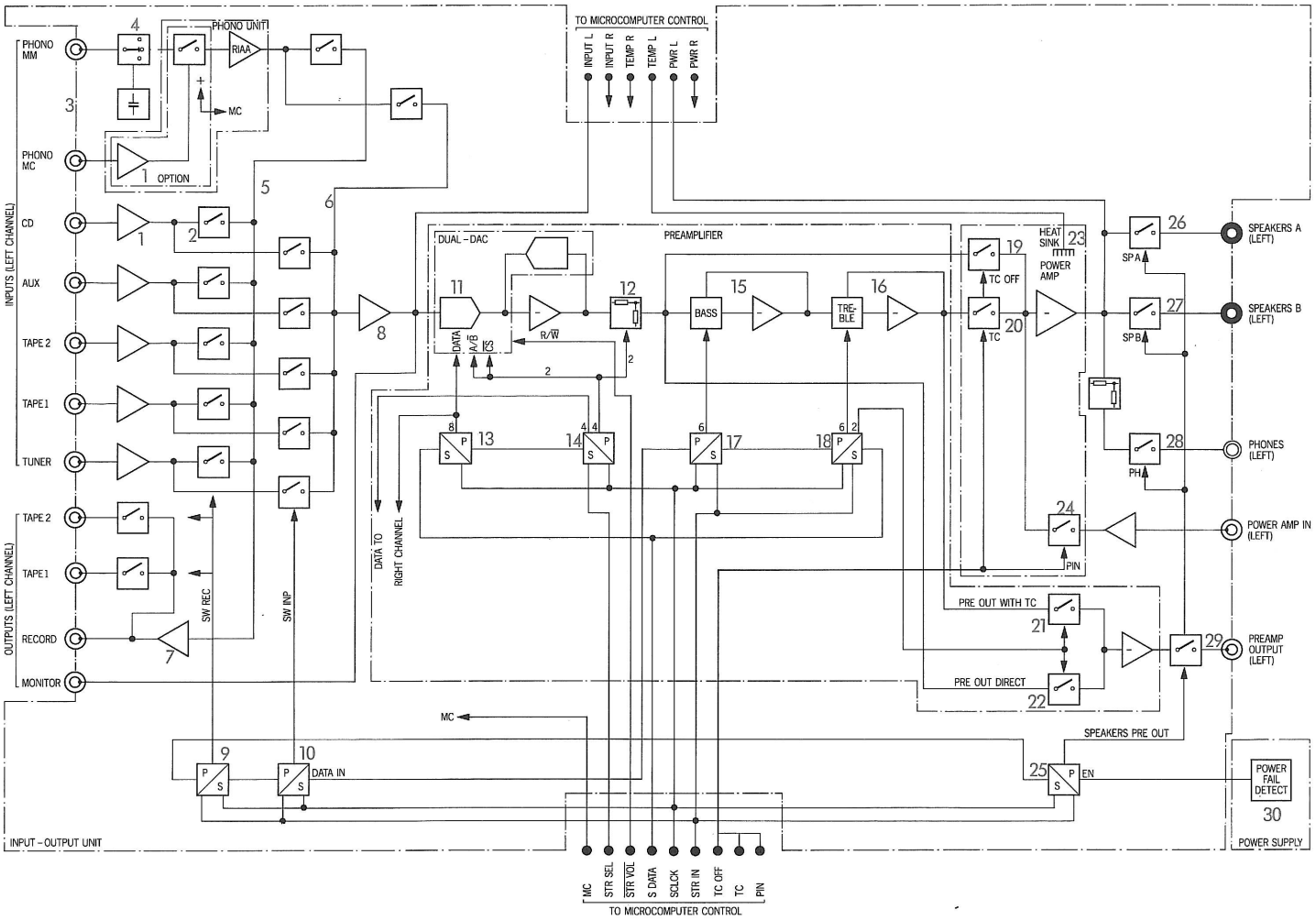


## MICROCOMPUTER SYSTEM

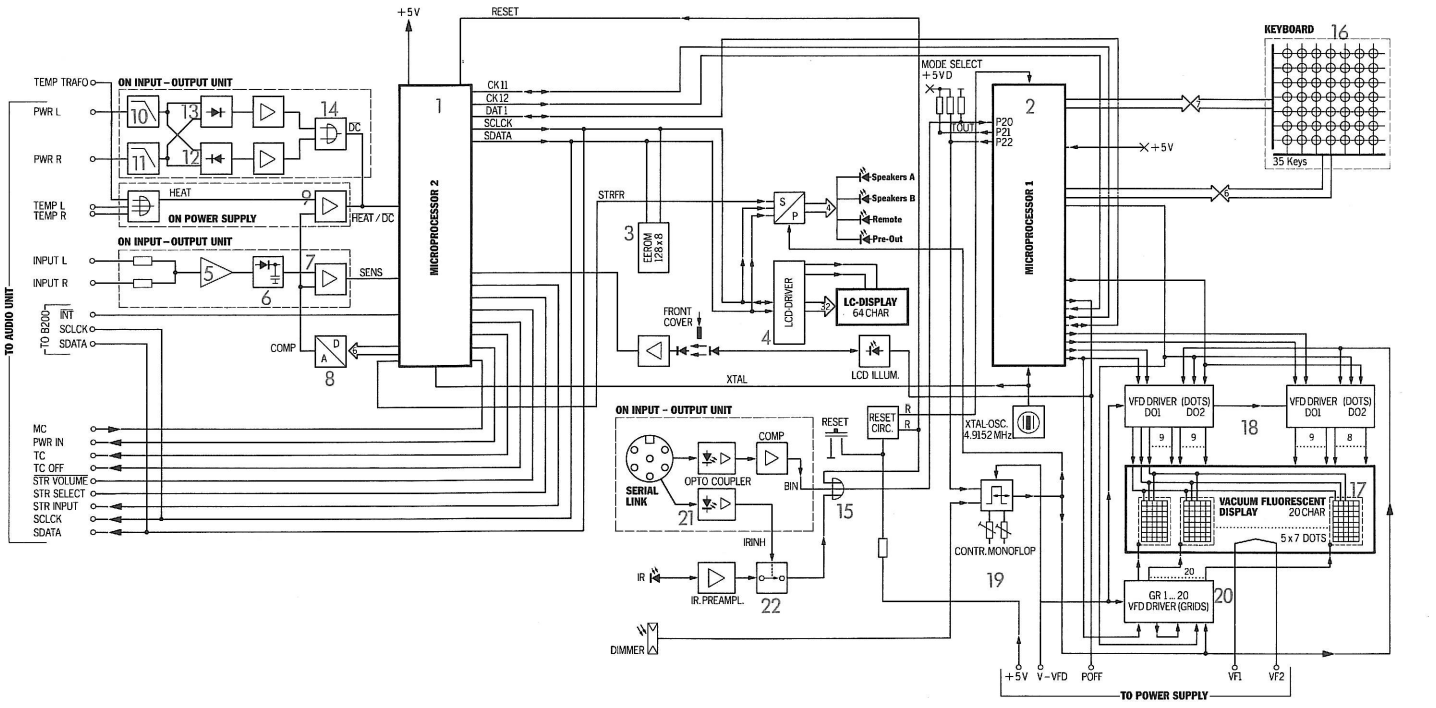

### Sensibilité

Les signaux INPUT L/R de l'INPUT-OUTPUT UNIT sont additionnés par l'amplificateur opérationnel (5) et convertis en une tension continue par un redresseur de crêtes (6). Ensuite, cette tension est évaluée par le micro-ordinateur (1) par l'intermédiaire du comparateur (7). Ceci est réalisé en ce que le micro-ordinateur décale par le convertisseur N/A (8) la tension de référence du comparateur jusqu'à ce que celui-ci commute. La tension d'entrée ainsi fixée est alors comparée à la tension mémorisée NOMINAL SENSITIVITY de 500 mV et la différence est mémorisée dans l'EEPROM. A la commutation de la source, le réglage de niveau de volume est réglé suivant la différence enregistrée.

### Surveillance thermique et CC

L'appareil contient trois sondes de température (CTN) pour PWR L, PWR R et le transfo. Elles sont appliquées ensemble au comparateur (9). La surveillance comprend trois niveaux.
Le premier seuil est atteint lorsqu'une des trois tensions dépasse 2,0 V. Le volume est alors abaissé de 10 dB. L'affichage indique ( <<<< ).
Le deuxième niveau est de 2,7 V et signifie que le transfo ou un des étages finaux est surchauffé (100°C). L'affichage indique (OVERLOADED !!!) et les relais (chap. 3.1: 26, 27, 28, 29) retombent immédiatement.
Le troisième niveau est atteint à 4,5 V et signifie qu'une tension continue se trouve aux PWR OUTPUTS. Cela est constaté en appliquant les sorties PWR L/R à deux passe-bas (10, 11), en convertissant les signaux par redresseur de crêtes négatif et un positif (12, 13) en une tension continue et en appliquant le résultat par une porte OU (14) à l'entrée de surveillance du micro-ordinateur. Celui-ci constate que le niveau le plus élevé est atteint. Il coupe immédiatement les relais de sortie et l'affichage indique (BREAKDOWN!!!).
Il y a encore le signal COVER indiquant si le clapet frontal est ouvert ou fermé. S'il est fermé, le micro-ordinateur interrompt une programmation non terminée. En même temps, le signal COVER coupe l'éclairage LCD. La communication entre les deux micro-ordinateurs se fait en mode "handshake" par les lignes DAT1, CK11, CK12. Le micro-ordinateur reçoit son rythme par un Driver depuis l'oscillateur cristal 4.9152 MHz du micro-ordinateur (2).

### Le micro-ordinateur (2)

Le micro-ordinateur (2) est monté en mode "monopuce", c'est-à-dire que les entrées et sorties sont montées comme "ports". Après chaque RESET, ce micro-ordinateur doit être remis dans le mode correct.
Cela est réalisé par les Ports P20, P21, P22. P21 et P22 sont mis à "high" par des résistances. P20 reçoit du Reset IC un "high" par une porte OU (15).
Par les différents Ports, il lit d'une part une matrice de clavier (16) de 29 touches, d'autre part il commande l'affichage à fluorescence (17).
Il est également responsable de l'échange des données par le Serial Link et la réception des signaux IR. Si l'appareil est mis en "STAND BY mode", Le micro-ordinateur (2) coupe l'alimentation par le signal POFF.

### Serial Link

L'échange de données entre le contrôleur et le micro-ordinateur se fait par une prise DIN à 6 pôles et un optocoupleur (21). En outre, l'entrée IR peut être coupée par optocoupleur, la tension d'alimentation étant ramenée du contrôleur à la prise bus et y coupe la ligne vers le préampli IR par l'optocoupleur (21) avec le commutateur (22).

### Affichage à fluorescence

Par quatre lignes parallèles, 10 bits de données sont chaque fois chargées aux DOTS Drivers (18). En outre, le micro-ordinateur donne une impulsion de blanc par un monoflop (19).
Pendant le temps de suppression, il y a commutation sur le chiffre suivant avec les GRIDS Drivers (20) et les données correspondantes sont reprises du DOTS Driver.
La commutation des différents chiffres se fait à la fréquence de 2 kHz qui donne pour chaque chiffre une fréquence multiplex de 100 Hz. Une LDR (servant de sonde pour la lumiere ambiante) fait varier la durée de suppression, provoquant une variation de la luminosité de l'affichage.

## 3.3 TRANSFORMATEUR RESEAU

### B250/B250-S

La partie alimentation se compose d'un transformateur commutable pour 100-240 V AC au moyen d'un sélecteur de tension.
Il y a six enroulements secondaires: un de +/-16V avec prise médiane, un pour VVFD (+33V), un de +5V et un pour le chauffage du Vacuum Fluorescent Display à prise médiane. Ce chauffage est coupé en STAND BY MODE par un interrupteur électronique. La prise médiane est polarisée à 6 V DC. Pour les deux POWER AMPLIFIER L/R il y a chaque fois un enroulement à prise médiane de 42 V AC et des enroulements supplémentaires de 53 V AC.
Le signal POFF commande l'alimentation. Il commute directement la tension VVFD et la tension +16V. Le réglage -16V et l'interrupteur de chauffage sont commandés par la tension +16V. La tension +5V est maintenue également en mode "STAND BY" (alimentation des micro-ordinateurs).

### B150

Le transfo réseau est disponible en trois versions différentes pour 110 V, 220 V et 240 V.
La sonde thermique (B250/B250-S) est supprimée, il y a en revanche un thermorupteur (120°C) du côté primaire.

## MAINS TRANSFORMER B250/B250–S

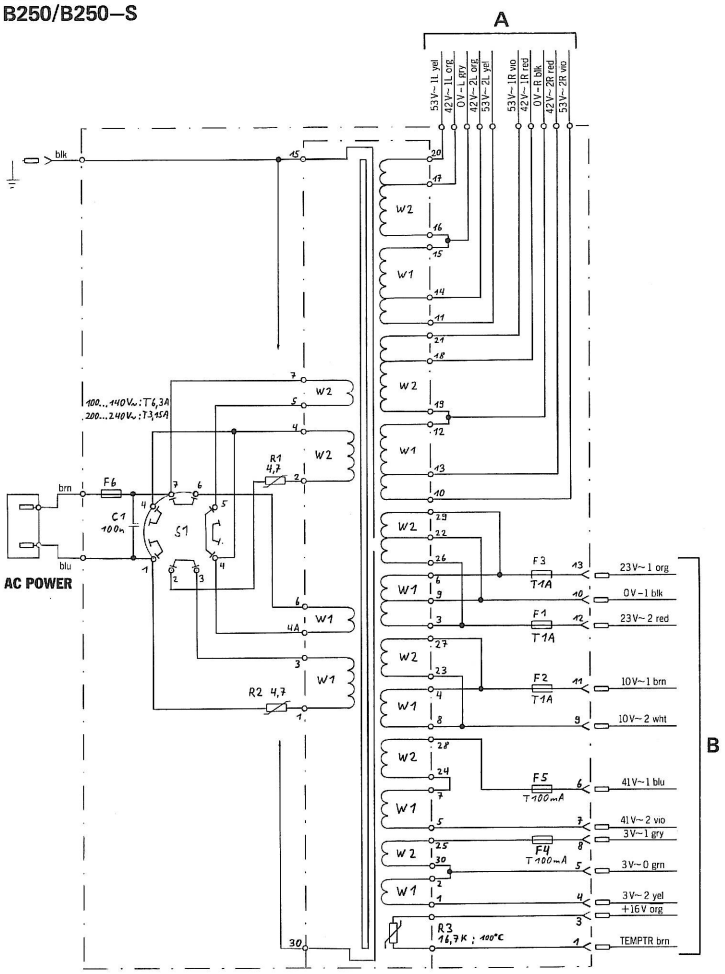


A: TO POWER AMPLIFIER
B: TO POWER SUPPLY UNIT

## MAINS TRANSFORMER B150

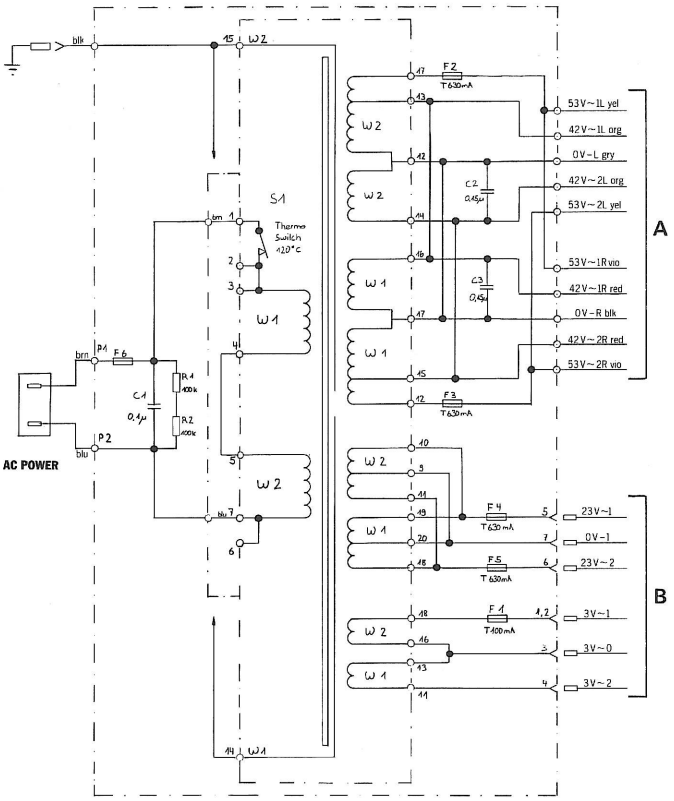


A: TO POWER AMPLIFIER
B: TO POWER SUPPLY UNIT

# 4. MESURES ET REGLAGES ELECTRIQUES

## 4.1 APPAREILS DE MESURE, ACCESSOIRES

**ATTENTION!**
**Danger d'électrocution lorsque l'appareil est ouvert! Certaines pièces sont à la tension du réseau!**

- Voltmètre BF — No. comm. 46020
- Voltmètre numérique — sur demande
- Oscilloscope — " "

## 4.2 PREPARATIFS

- Retirer la tôle supérieure (chap.2.2.1)

## 4.3 TENSIONS DE SERVICE

Tensions de service POWER AMPLIFIER:

| Tension | Broche | Fiche Canal gauche | Fiche Canal droit |
|---|---|---|---|
| 53 V | 1 | jaune | violette |
| 53 V | 2 | jaune | violette |
| 42 V | 3 | orange | rouge |
| 42 V | 4 | orange | rouge |
| 0 V | 4 | grise | noire |

Les tensions doivent être mesurées séparément pour les deux étages finaux étant donné que le transformateur a un enroulement séparé pour chaque canal.

## 4.4 COURANT DE REPOS

- Mettre l'appareil sous tension; le courant de repos doit être mesuré à la température de service. Celle-ci est atteinte 10 minutes environ après la mise sous tension.
- Relier le voltmètre BF au POWER AMPLIFIER.

  TP1 --> +
  TP2 --> -

- Régler au potentiomètre RA91 une tension de 1 mV.
- Répéter le réglage sur le second étage final.

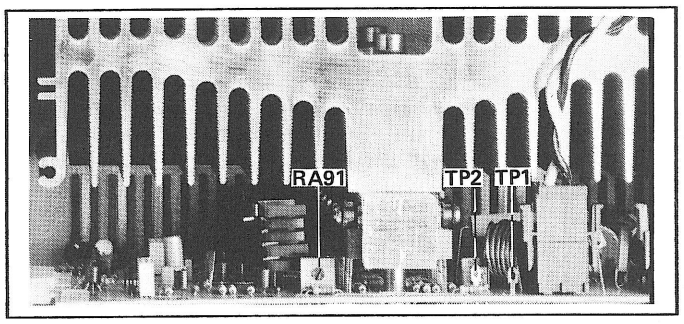


Fig.4.1

## 4.5 COMMANDE DE LUMINOSITE DE L'AFFICHAGE VF

Les deux potentiomètres R67 et R70 permettent d'aligner l'électronique réagissant à la lumière ambiante:

- Détacher la partie frontale jusqu'à ce que les deux potentiomètres soient visibles.
- Relier l'oscilloscope à ATP1 (IC9 broche 6); horizontal: 50 µs/div. vertical: 1 V/div.

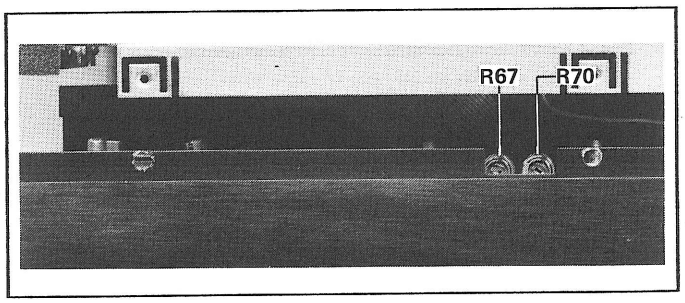


Fig. 4.2

- Tourner le potentiomètre R67 au minimum dans le sens antihoraire.
- Régler dans l'obscurité totale un rapport d'impulsions de 9:1 avec R70.
- Mettre une source de lumière jaune de 20 lux devant le verre gauche à proximité de la résistance photo-électrique.
- Régler avec R67 un rapport d'impulsions de 4:1.
- Augmenter la luminosité à 200 lux, le rapport d'impulsions doit devenir inférieur à 1:9.

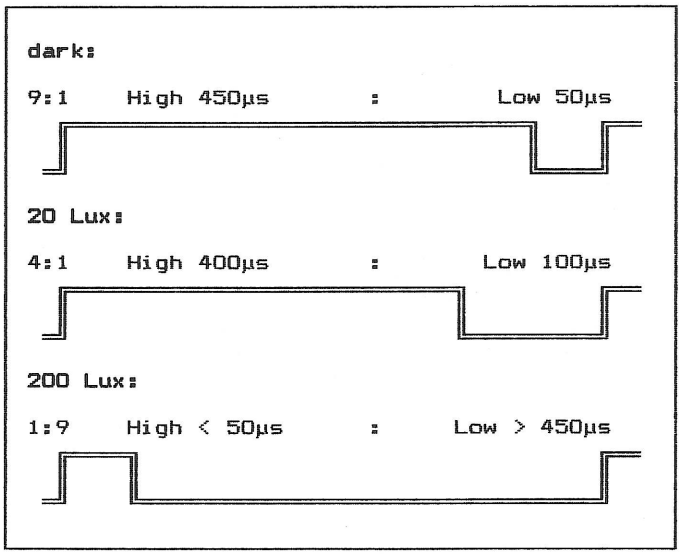


Fig. 4.3

Les appareils avec un POWER SUPPLY UNIT no. 1.726.230.81 ont un potentiomètre supplémentaire RA1 permettant de modifier la luminosité de base au moyen d'un tournevis sans démonter l'appareil.

Réglage de base: RA1 à la butée droite
--> pleine tension à l'affichage
--> V-FIP ≈ 36 V

Changement maximal: RA1 à la butée gauche
--> 2/3 V-FIP ≈ 24 V

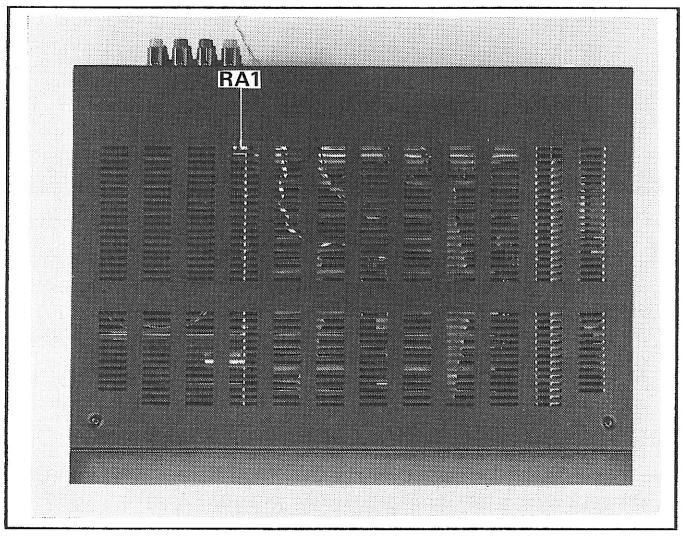


Fig. 4.4

## 5. CONTENTS

PAGE


| | | | |
|---|---|---|---|
| BLOCK DIAGRAM MAINS SECTION | | | 5/1 |
| AUDIO BLOCK DIAGRAM (LEFT CHANNEL) | | | 5/2 |
| BLOCK DIAGRAM MICROCOMPUTER SYSTEM | | | 5/3 |
| INTERCONNECTION TABLE | | | 5/4 |
| MAINS TRANSFORMER | 1.725.200.81 | B250(-S) | 5/5 |
| POWER SUPPLY PCB | 1.725.230.81 | B250(-S) | 5/5 |
| INPUT/OUTPUT PCB | 1.725.241.81 | B250(-S) | 5/8 |
| PHONO PCB MM | 1.725.255.00 | B150/B250(-S) | 5/13 |
| PHONO PCB MM+MC | 1.725.250.00 | B250(-S) | 5/15 |
| PREAMPLIFIER PCB | 1.725.260.00 | B250(-S) | 5/17 |
| POWER AMPLIFIER PCB | 1.725.270.00 | B250(-S) | 5/21 |
| INTERCONNECTION PCB | 1.725.280.81 | B250(-S) | 5/25 |
| MICROCOMPUTER PCB | 1.725.290.82 | B250(-S) | 5/27 |
| MICROCOMPUTER PCB | 1.725.291.20 | B250(-S) | 5/29 |
| MAINS TRANSFORMER 220V | 1.725.205.81 | B150 | 5/31 |
| MAINS TRANSFORMER 110V | 1.725.206.81 | B150 | 5/31 |
| MAINS TRANSFORMER 240V | 1.725.207.81 | B150 | 5/31 |
| POWER SUPPLY PCB | 1.725.235.00 | B150 | 5/33 |
| INPUT/OUTPUT PCB | 1.725.245.00 | B150 | 5/34 |
| PREAMPLIFIER PCB | 1.725.265.00 | B150 | 5/39 |
| POWER AMPLIFIER PCB | 1.725.275.00 | B150 | 5/43 |
| INTERCONNECTION PCB | 1.725.285.00 | B150 | 5/46 |
| MICROCOMPUTER PCB | 1.725.295.00 | B150 | 5/47 |
| MICROCOMPUTER PCB | 1.725.296.20 | B150 | 5/49 |

## BLOCK DIAGRAM MAINS SECTION

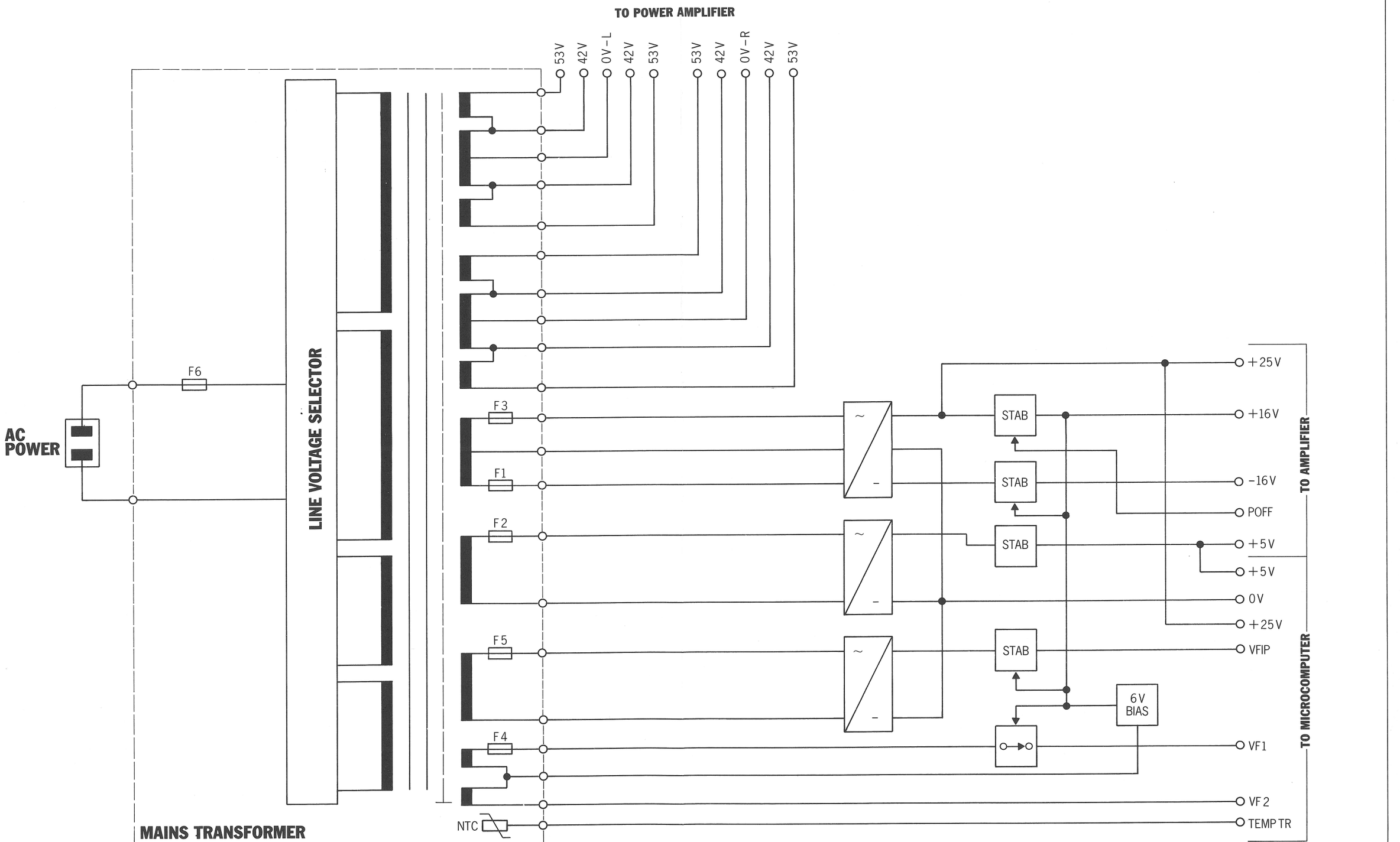

## AUDIO BLOCK DIAGRAM (LEFT CHANNEL)

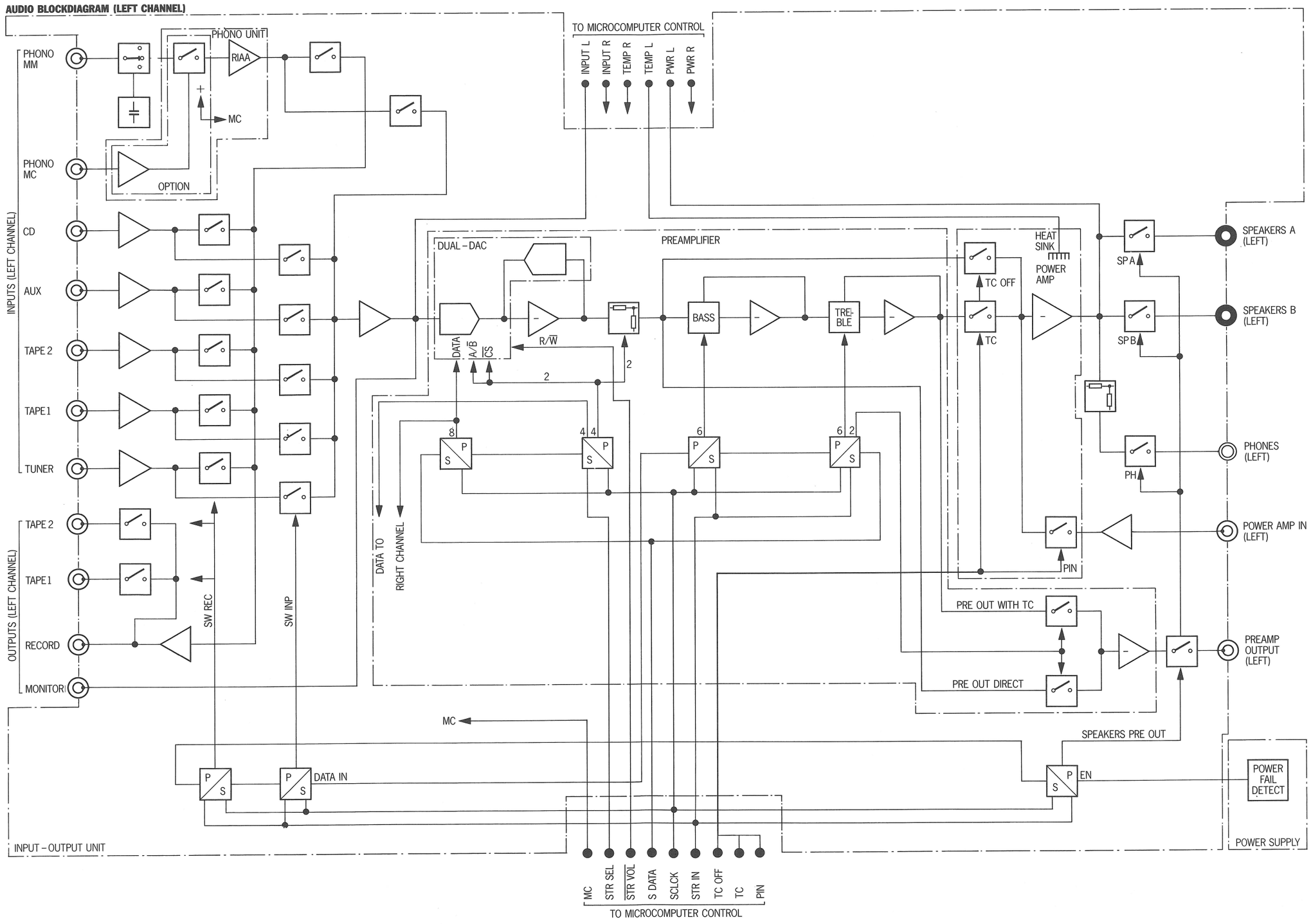

## BLOCK DIAGRAM MICROCOMPUTER SYSTEM

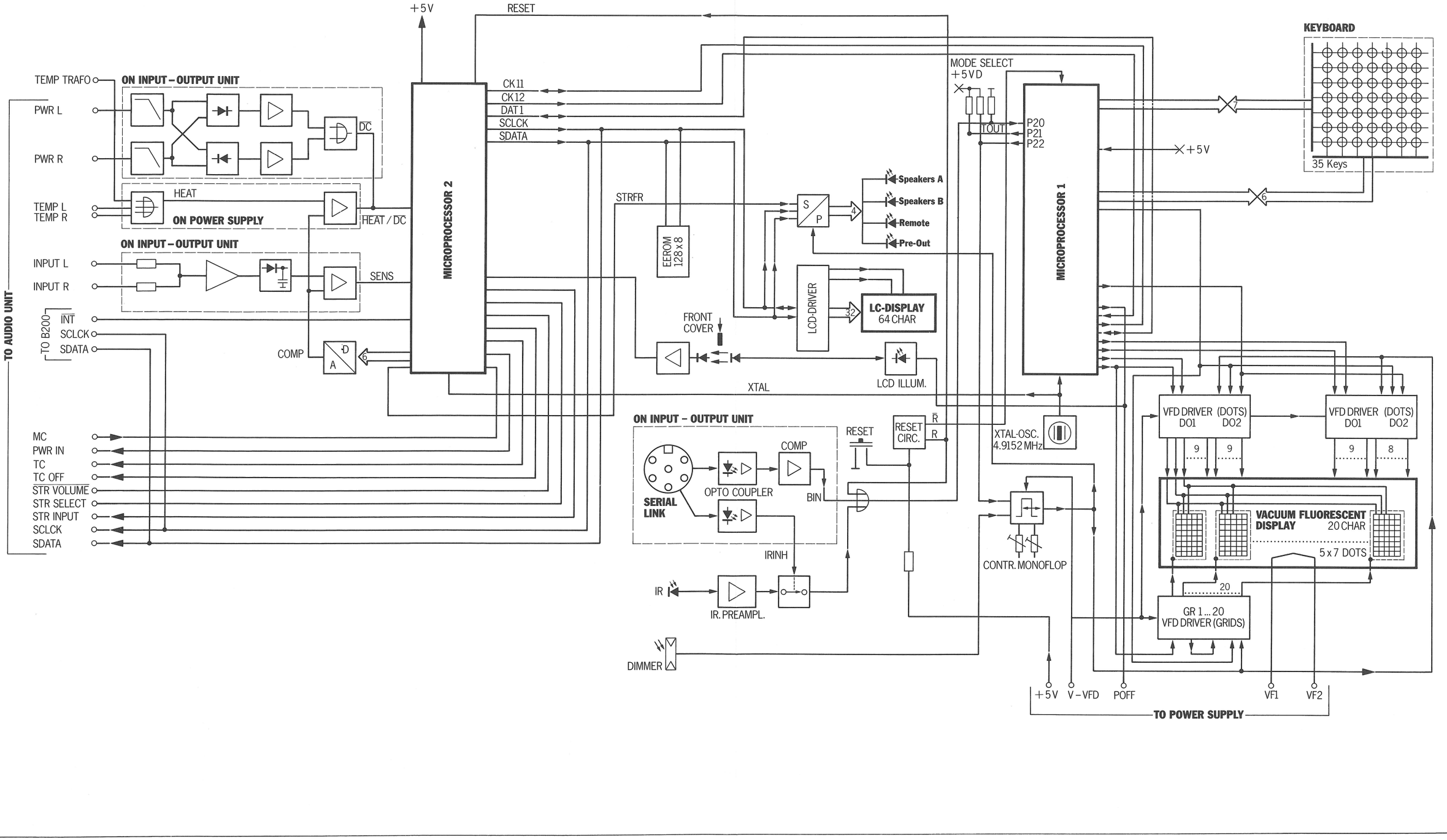

## INTERCONNECTION TABLE

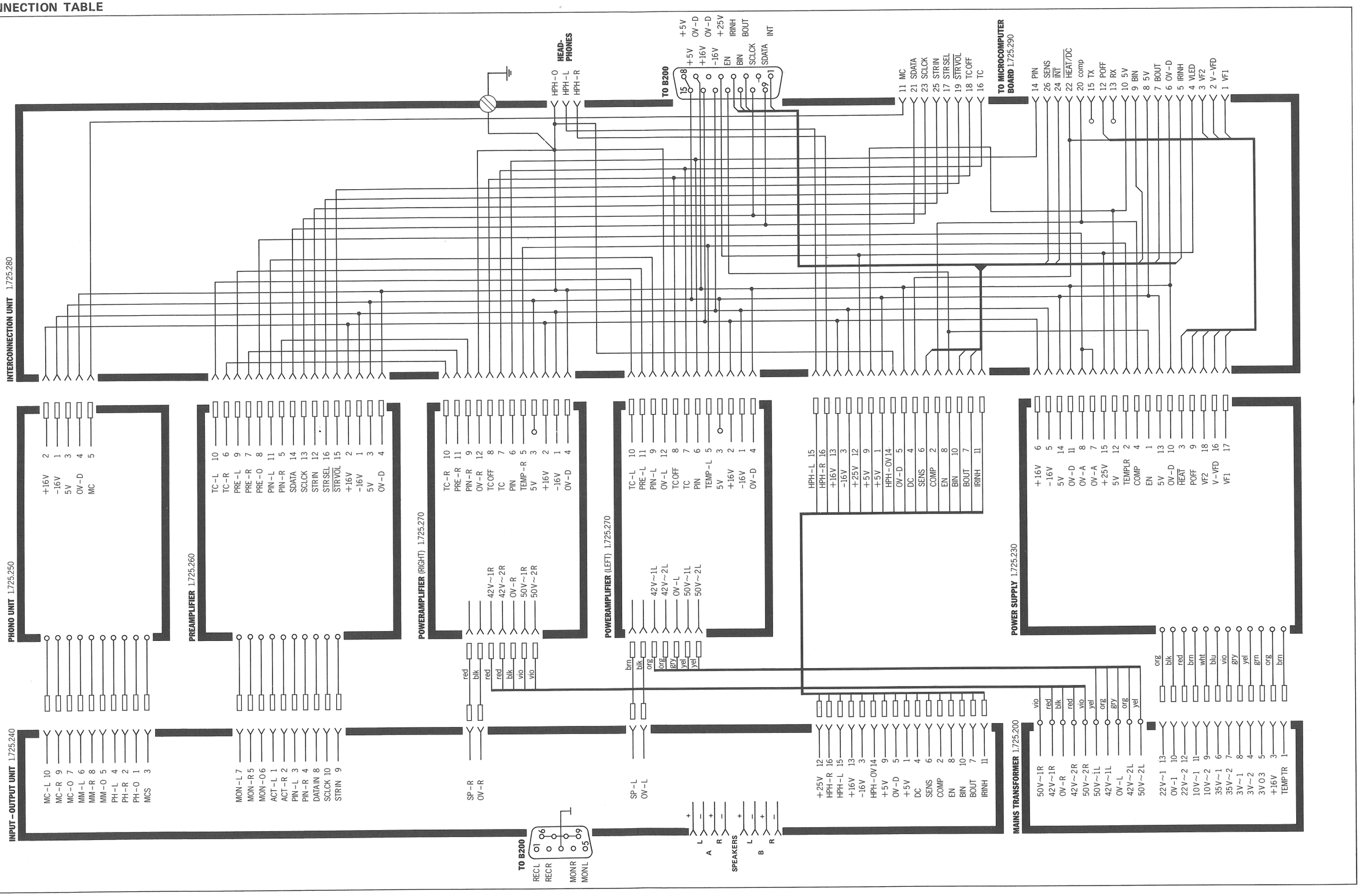

**MAINS TRANSFORMER 1.725.200.81 B250 (–S)**
**POWER SUPPLY PCB 1.725.230.81 B250 (–S)**

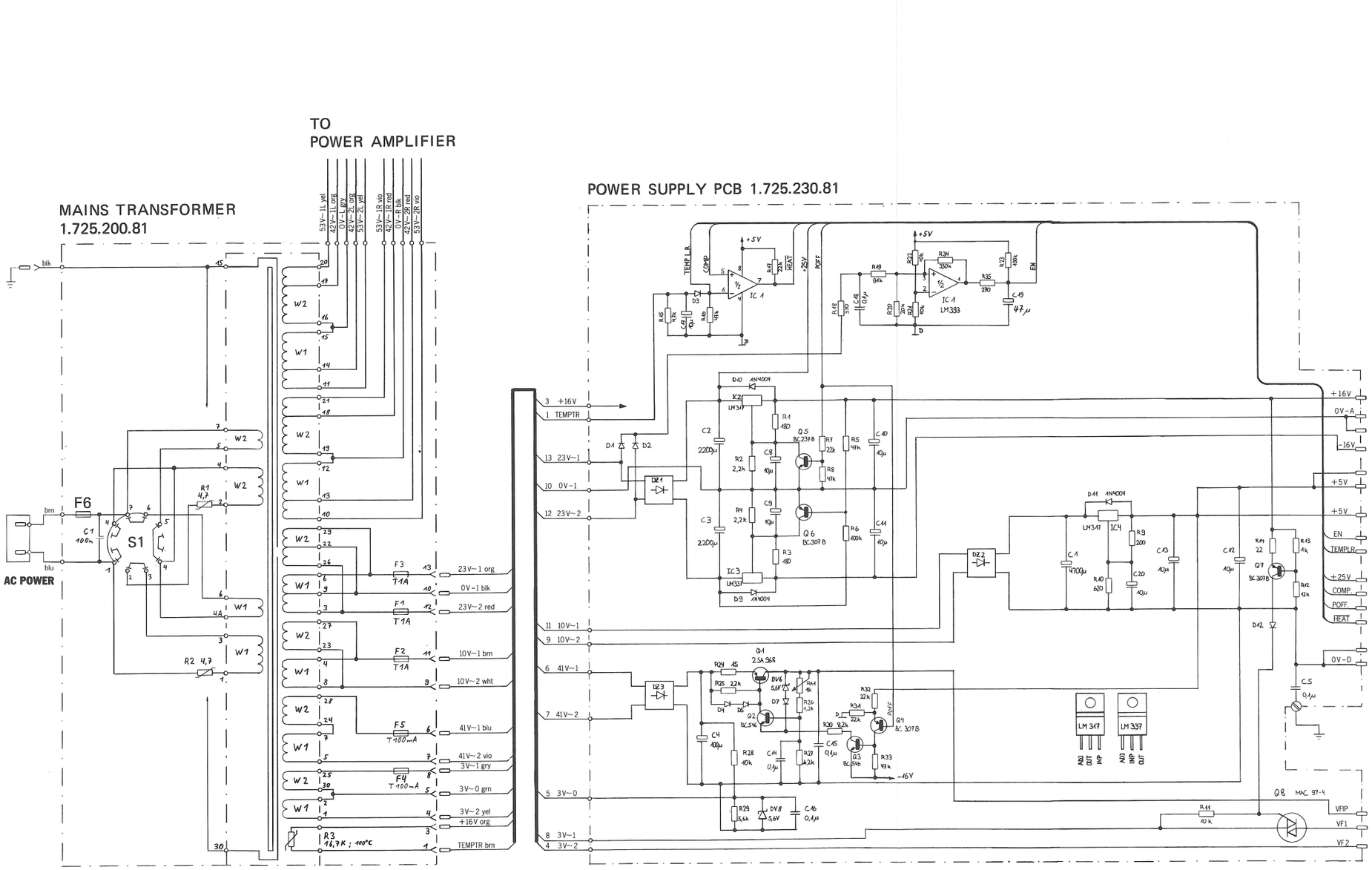


INTERCONNECTION PCB
1.725.280.00

LINE VOLTAGE SELECTOR S1
FUSSE F6: 100....140V ~ :T6,3A
200....240V ~ :T3,15A

| | | | | |
|---|---|---|---|---|
| 0 20.6.86 Hartwig | 1 3.4.87 Ha | 2 31.8.87 Ha | 3 11.9.87 Ha | 4 11.11.87 Ha |
| | AMPLIFIER B250 | | | PAGE 1 OF 1 |
| STUDER | MAINS TRANSFORMER | | SC | 1.725.200.00 |

## MAINS TRANSFORMER 1.725.200.81 B250 (–S)

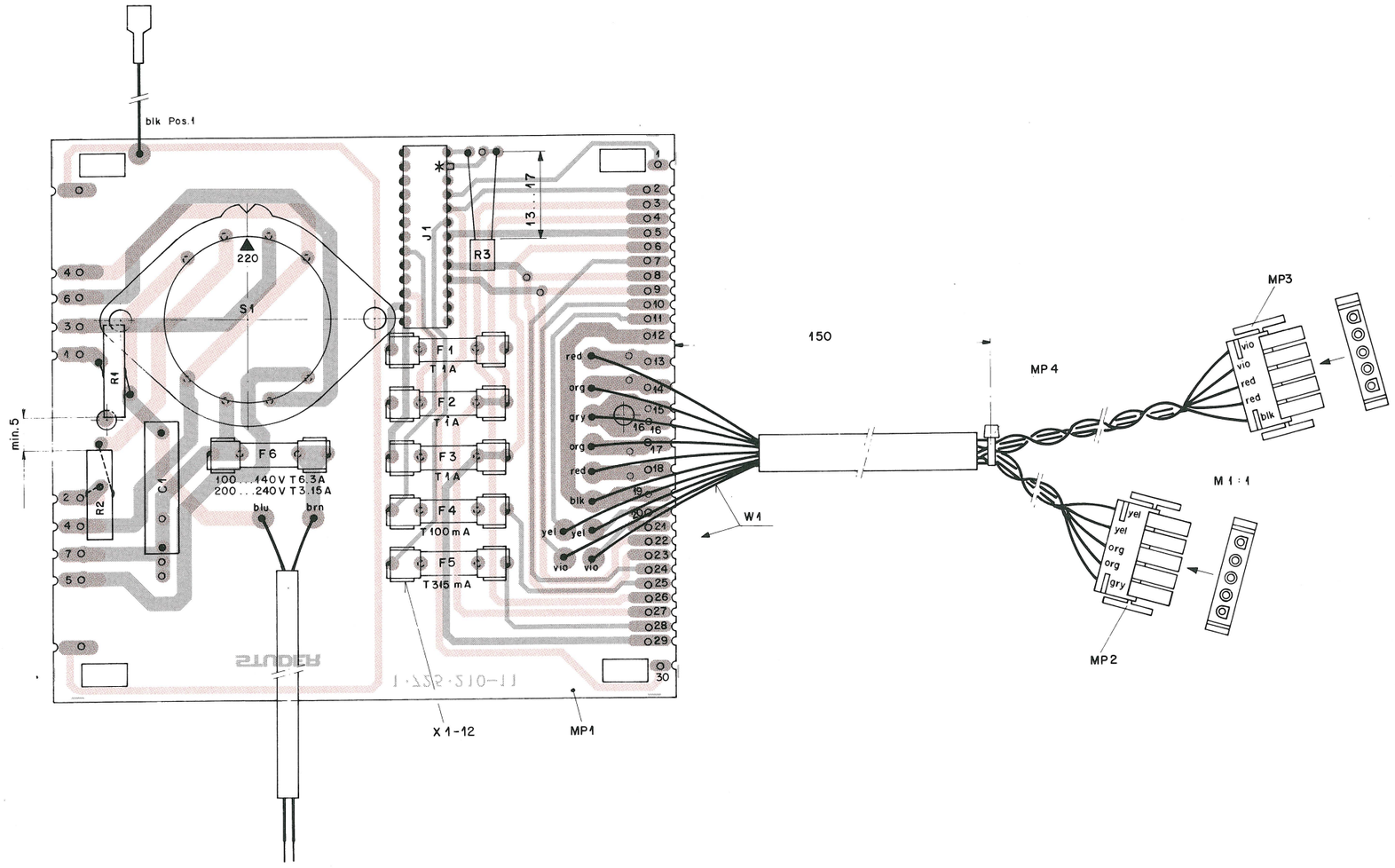


| IND. | POS.NO. | PART NO. | VALUE | SPECIFICATIONS / EQUIVALENT | MANUF. |
|---|---|---|---|---|---|
| (02) | C.....1 | 59.14.0473 | 47nF | IEC 65 | RIFA |
| (04) | C.....1 | 59.99.0453 | 0.1uF | IEC 65 | RIFA |
| | F.....1 | 51.01.0117 | | Fuse T 1A | |
| | F.....2 | 51.01.0117 | | Fuse T 1A | |
| | F.....3 | 51.01.0117 | | Fuse T 1A | |
| | F.....4 | 51.01.0107 | | Fuse T 100mA | |
| (02) | F.....5 | 51.01.0107 | | Fuse T 100mA | |
| (04) | F.....5 | 51.01.0112 | | Fuse T 315mA | |
| | F.....6 | 51.01.0122 | | Fuse T 3.15A | |
| | MP....1 | 1.725.210.11 | | Distributor Board | |
| | MP....2 | 54.25.0305 | | Power Connector | |
| | MP....3 | 54.25.0305 | | Power Connector | |
| | MP....4 | 35.03.0109 | | Wire Belt | |
| | J.....1 | 54.01.0309 | 13pole | CIS-Socket | |
| | R.....1 | 57.93.1479 | 4.7 | NTC | |
| (02) | R.....2 | 57.93.0309 | 4.7 | NTC | |
| (01) | R.....2 | 57.93.1479 | 4.7 | NTC | |
| | R.....3 | 57.99.0220 | 16.7K | NTC | |
| | S.....1 | 53.03.0131 | | Voltage Selector | |
| | W.....1 | 1.725.210.93 | | Wire List | |
| | X.....1 | 53.03.0142 | | Fuse Holder | |
| | X.....2 | 53.03.0142 | | Fuse Holder | |
| | X.....3 | 53.03.0142 | | Fuse Holder | |
| | X.....4 | 53.03.0142 | | Fuse Holder | |
| | X.....5 | 53.33.0142 | | Fuse Holder | |
| | X.....6 | 53.33.0142 | | Fuse Holder | |
| | X.....7 | 53.03.0142 | | Fuse Holder | |
| | X.....8 | 53.03.0142 | | Fuse Holder | |
| | X.....9 | 53.33.0142 | | Fuse Holder | |
| | X....10 | 53.33.0142 | | Fuse Holder | |



| IND. | POS.NO. | PART NO. | VALUE | SPECIFICATIONS / EQUIVALENT | MANUF. |
|---|---|---|---|---|---|
| | X....11 | 53.03.0142 | | Fuse Holder | |
| | X....12 | 53.03.0142 | | Fuse Holder | |

(01) Correction of POSLIST
(02) Improvement for FTZ ratings
(03) Improvement for FTZ ratings
(04) Quality Improvement

ORIG 87/04/03 (01) 87/06/26 (02) 87/08/31 (03) 87/09/10 (04) 88/06/14

## POWER SUPPLY PCB 1.725.230.81 B250 (–S)

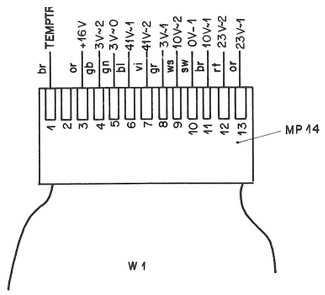


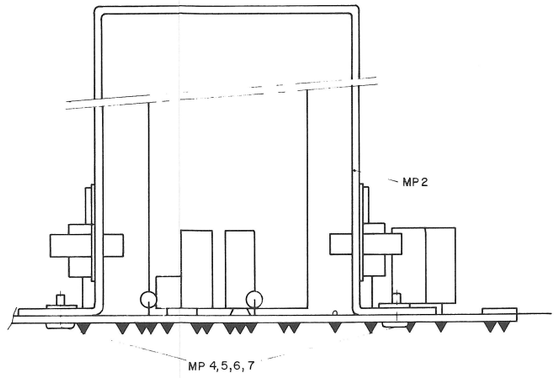


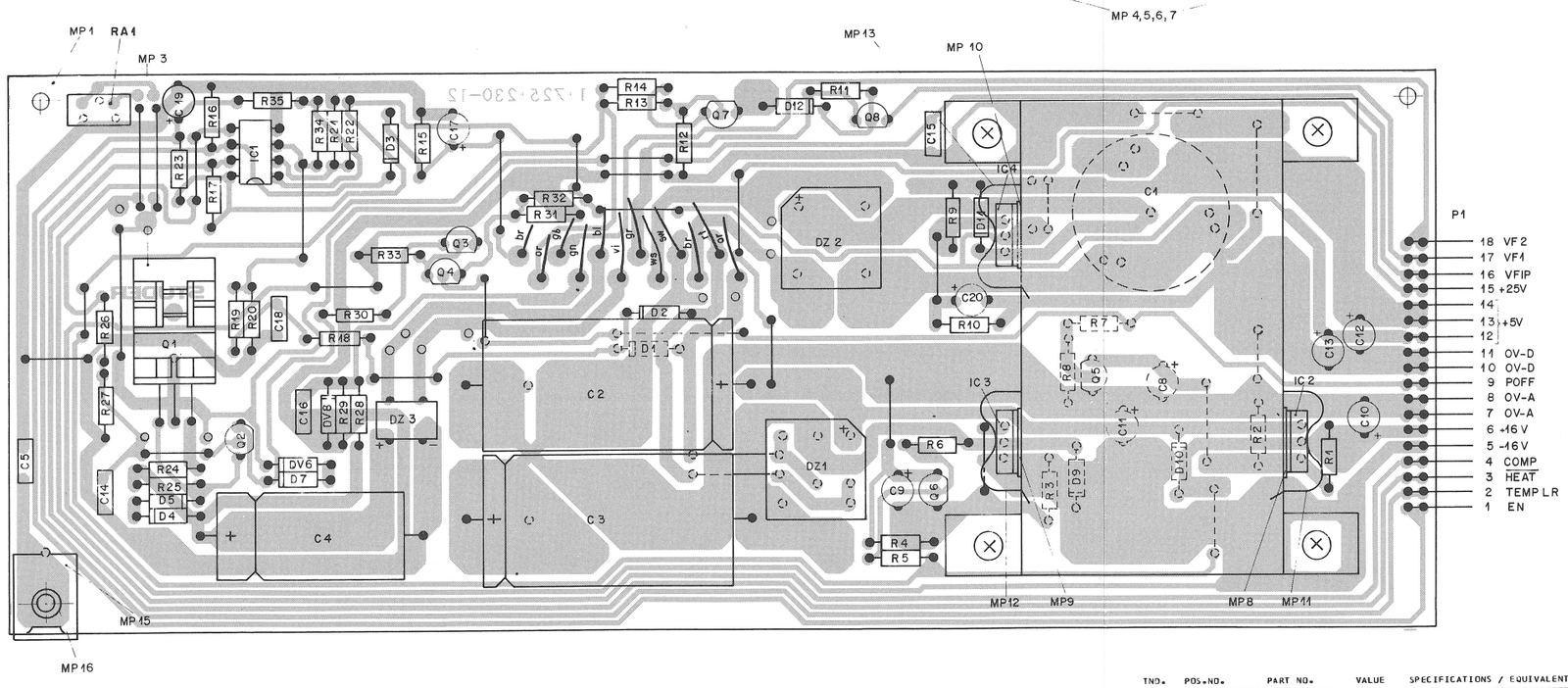


| IND. | POS.NO. | PART NO. | VALUE | SPECIFICATIONS / EQUIVALENT | MANUF. |
|---|---|---|---|---|---|
| | R.....3 | 57.11.4181 | 180 | 2%, 0.25W , MF | |
| | R.....4 | 57.11.4222 | 2.2 k | 2%, 0.25W , MF | |
| | R.....5 | 57.11.4473 | 47 k | 2%, 0.25W , MF | |
| | R.....6 | 57.11.4104 | 100 k | 2%, 0.25W , MF | |
| | R.....7 | 57.11.4223 | 22 k | 2%, 0.25W , MF | |
| | R.....8 | 57.11.4473 | 47 k | 2%, 0.25W , MF | |
| | R.....9 | 57.11.3201 | 200 | 1%, 0.25W , MF | |
| | R....10 | 57.11.3621 | 620 | 1%, 0.25W , MF | |
| | R....11 | 57.11.4103 | 10 k | 2%, 0.25W , MF | |
| | R....12 | 57.11.4123 | 12 k | 2%, 0.25W , MF | |
| | R....13 | 57.11.4102 | 1 k | 2%, 0.25W , MF | |
| | R....14 | 57.11.4220 | 22 | 2%, 0.25W , MF | |
| | R....15 | 57.11.4472 | 4.7 k | 2%, 0.25W , MF | |
| | R....16 | 57.11.4473 | 47 k | 2%, 0.25W , MF | |
| | R....17 | 57.11.4223 | 22 k | 2%, 0.25W , MF | |
| | R....18 | 57.11.4331 | 330 | 2%, 0.25W , MF | |
| | R....19 | 57.11.3913 | 91 k | 2%, 0.25W , MF | |
| | R....20 | 57.11.3203 | 20 k | 2%, 0.25W , MF | |
| | R....21 | 57.11.4103 | 10 k | 2%, 0.25W , MF | |
| | R....22 | 57.11.4103 | 10 k | 2%, 0.25W , MF | |
| | R....23 | 57.11.4104 | 100 k | 2%, 0.25W , MF | |
| | R....24 | 57.11.4150 | 15 | 2%, 0.25W , MF | |
| | R....25 | 57.11.4222 | 2.2 k | 2%, 0.25W , MF | |
| | R....26 | 57.11.4122 | 1.2 k | 2%, 0.25W , MF | |
| | R....27 | 57.11.3622 | 6.2 k | 2%, 0.25W , MF | |
| | R....28 | 57.11.4103 | 10 k | 2%, 0.25W , MF | |
| | R....29 | 57.11.4562 | 5.6 k | 2%, 0.25W , MF | |
| | R....30 | 57.11.4822 | 8.2 k | 2%, 0.25W , MF | |
| | R....31 | 57.11.4223 | 22 k | 2%, 0.25W , MF | |
| | R....32 | 57.11.4223 | 22 k | 2%, 0.25W , MF | |
| | R....33 | 57.11.4473 | 47 k | 2%, 0.25W , MF | |
| | R....34 | 57.11.4334 | 330 k | 2%, 0.25W , MF | |
| | R....35 | 57.11.4271 | 270 | 2%, 0.25W , MF | |
| | RA....1 | 58.01.9102 | 1 k | 10%, 0.5 W , CERM | |
| | W.....1 | 1.725.230.93 | | Wiring list | |



| IND. | POS.NO. | PART NO. | VALUE | SPECIFICATIONS / EQUIVALENT | MANUF. |
|---|---|---|---|---|---|
| | DZ....3 | 70.01.0216 | | 200 V, 1 A | GI, VARO |
| | IC....1 | 50.35.0283 | LM 393 N | Dual comp.with open coll. / LM 393 P | NS,TI |
| | IC....2 | 50.10.0104 | LM 317 T | +1.2-37 V ,V-Reg./LM317 KC | NS,TI |
| | IC....3 | 50.10.0105 | LM 337 T | -1.2-37 V ,V-Reg./LM337 KC | NS,TI |
| | IC....4 | 50.10.0104 | LM 317 T | +1.2-37 V ,V-Reg./LM317 KC | NS,TI |
| | MP....1 | 1.725.230.12 | | Power Supply - PCB | ST |
| | MP....2 | 1.725.230.01 | | Heatsink | ST |
| | MP....3 | 50.20.3004 | | Heatsink | |
| | MP....4 | 21.99.0180 | | Screw M3*5 | |
| | MP....5 | 21.99.0180 | | Screw M3*5 | |
| | MP....6 | 21.99.0180 | | Screw M3*5 | |
| | MP....7 | 21.99.0180 | | Screw M3*5 | |
| | MP....8 | 50.20.0315 | | Isolator | |
| | MP....9 | 50.20.0315 | | Isolator | |
| | MP...10 | 50.20.0315 | | Isolator | |
| | MP...11 | 50.20.2004 | | Montage-Clip for TO 220 | |
| | MP...12 | 50.20.2004 | | Montage-Clip for TO 220 | |
| | MP...13 | 50.20.2004 | | Montage-Clip for TO 220 | |
| | MP...14 | 54.01.0281 | 13 pole | Connector CIS | |
| | MP...15 | 1.726.780.01 | | Holder | ST |
| | MP...16 | 28.21.1450 | | Tubular Rivet | |
| | P.....1 | 54.01.0278 | 18-Pin | Plug assembly CIS | AMP |
| | Q.....1 | 50.03.0801 | 2SA968 | Power Transistor PNP | TO |
| | Q.....2 | 50.03.0491 | BC 546B | Small Signal Vce:60V NPN | Any |
| | Q.....3 | 50.03.0491 | BC 546B | Small signal Vce:60V NPN | Any |
| | Q.....4 | 50.03.0515 | BC 307B | Small signal PNP | Any |
| | Q.....5 | 50.03.0436 | BC 237B | Small signal NPN | Any |
| | Q.....6 | 50.03.0515 | BC 307B | Small signal PNP | Any |
| | Q.....7 | 50.03.0515 | BC 307B | Small signal PNP | Any |
| | Q.....8 | 50.08.0001 | MAC 97-4 | Triac 0.6 A, 200 V | Mot |
| | R.....1 | 57.11.4181 | 180 | 2%, 0.25W , MF | |
| | R.....2 | 57.11.4222 | 2.2 k | 2%, 0.25W , MF | |



| IND. | POS.NO. | PART NO. | VALUE | SPECIFICATIONS / EQUIVALENT | | MANUF. |
|---|---|---|---|---|---|---|
| | C.....1 | 59.22.4472 | 4700 uF | -20%, 16V , EL | | |
| | C.....2 | 59.25.5222 | 2200 uF | -20%, 40V , EL | | |
| | C.....3 | 59.25.5222 | 2200 uF | -20%, 40V , EL | | |
| | C.....4 | 59.25.6101 | 100 uF | -20%, 63V , EL | | |
| | C.....5 | 59.06.0104 | 0.1 uF | 10%, 63V , PETP | | |
| | C.....8 | 59.22.6100 | 10 uF | -20%, 35V , EL | | |
| | C.....9 | 59.22.6100 | 10 uF | -20%, 35V , EL | | |
| | C....10 | 59.22.6100 | 10 uF | -20%, 35V , EL | | |
| | C....11 | 59.22.6100 | 10 uF | -20%, 35V , EL | | |
| | C....12 | 59.22.6100 | 10 uF | -20%, 35V , EL | | |
| | C....13 | 59.22.6100 | 10 uF | -20%, 35V , EL | | |
| | C....14 | 59.06.0104 | 0.1 uF | 10%, 63V , PETP | | |
| | C....15 | 59.06.0104 | 0.1 uF | 10%, 63V , PETP | | |
| | C....16 | 59.06.0104 | 0.1 uF | 10%, 63V , PETP | | |
| | C....17 | 59.22.6100 | 10 uF | -20%, 35V , EL | | |
| | C....18 | 59.06.0104 | 0.1 uF | 10%, 63V , PETP | | |
| | C....19 | 59.22.3470 | 47 uF | -20%, 10V , EL | | |
| | C....20 | 59.22.6100 | 10 uF | -20%, 35V , EL | | |
| (03) | D.....1 | 50.04.0125 | 1N 4448 | | SI | Any |
| (01) | D.....1 | 50.04.0133 | BAV 20 | | SI | |
| (03) | D.....2 | 50.04.0125 | 1N 4448 | | SI | Any |
| (01) | D.....2 | 50.04.0133 | BAV 20 | | SI | |
| | D.....3 | 50.04.0125 | 1N 4448 | | SI | Any |
| | D.....4 | 50.04.0125 | 1N 4448 | | SI | Any |
| | D.....5 | 50.04.0125 | 1N 4448 | | SI | Any |
| | D.....7 | 50.04.0125 | 1N 4448 | | SI | Any |
| | D.....9 | 50.04.0105 | 1N 4004 | | SI | Any |
| | D....10 | 50.04.0105 | 1N 4004 | | SI | Any |
| | D....11 | 50.04.0105 | 1N 4004 | | SI | Any |
| | D....12 | 50.04.0125 | 1N 4448 | | SI | Any |
| | DV....6 | 50.04.1108 | 5.6 V | 5%, 0.4 W | Z | Any |
| | DV....8 | 50.04.1108 | 5.6 V | 5%, 0.4 W | Z | Any |
| | DZ....1 | 70.01.0226 | | 280 V, 2 A | | GI |
| | DZ....2 | 70.01.0226 | | 280 V, 2 A | | GI |



(01) Quality Improvement

EL=Electrolytic, CER=Ceramic, PETP=Polyester, SI=Silicon, MF=Metalfilm,

Manufacturer: NS=National Semiconductors, TI=Texas Instruments
MOT=Motorola,PH=Philips,Sie=Siemens,ST=Studer

ORIG 88/02/29 (01) 88/08/25

## INPUT/OUTPUT PCB 1.725.241.81 B250 (–S) PART I

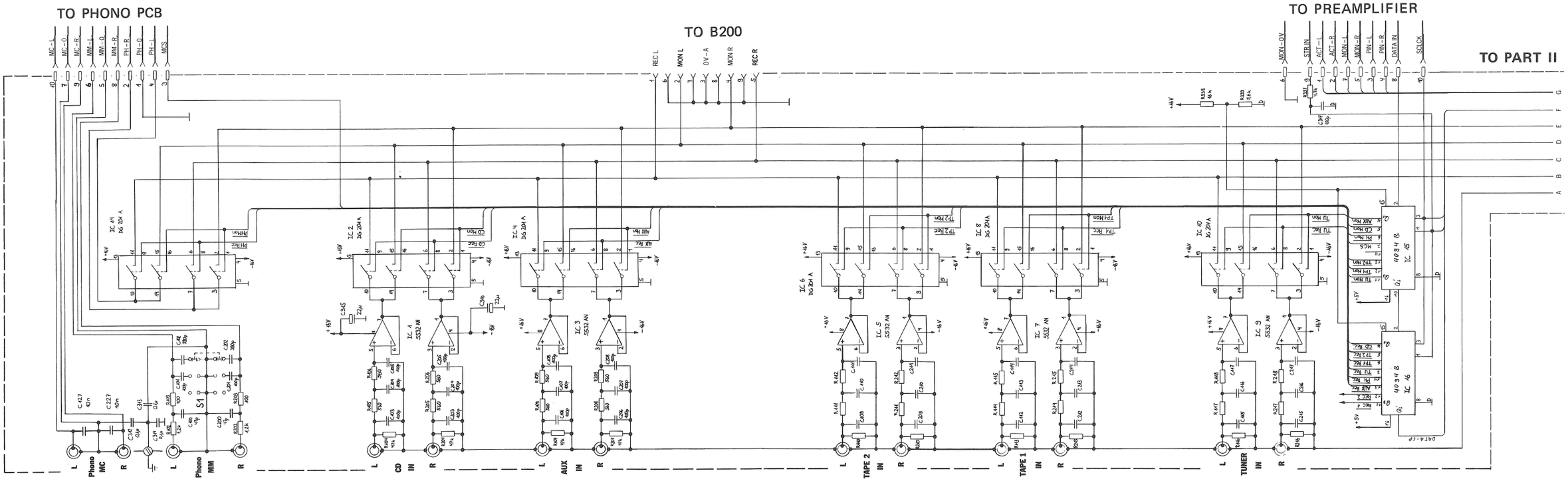


| | | | | |
|---|---|---|---|---|
| 0 140987 | | | | PAGE 4 OF 4 |
| STUDER | AMPLIFIER B250 | | | |
| | INPUT-OUTPUT UNIT | SC | 1.725.241.81 | |

## INPUT/OUTPUT PCB 1.725.241.81 B250 (–S) PART II

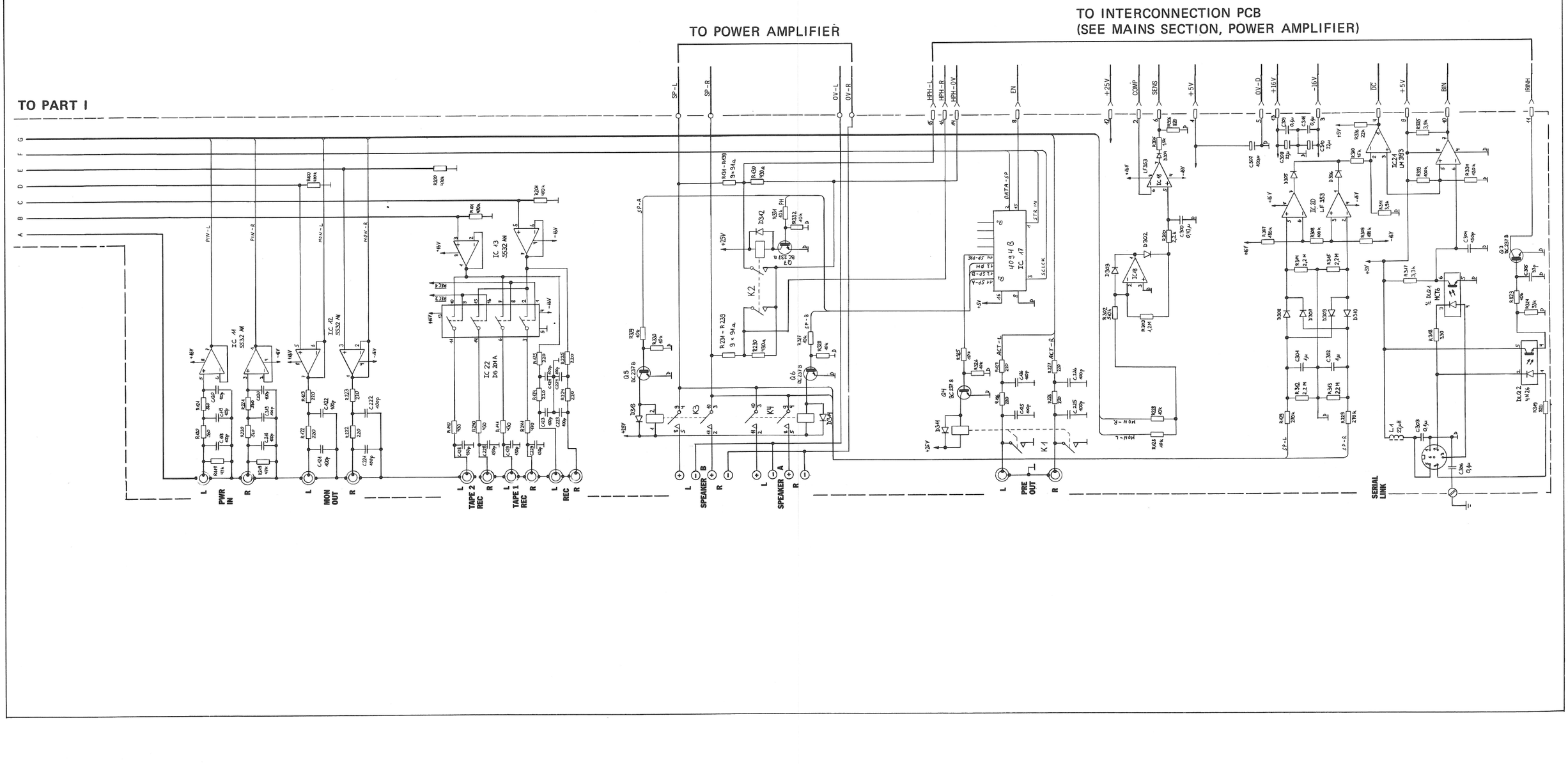

## INPUT/OUTPUT PCB 1.725.241.81 B250 (–S)

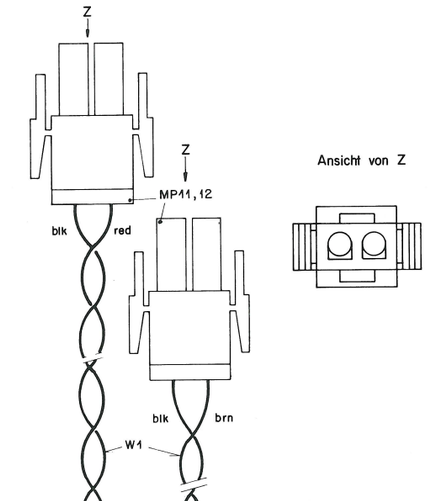


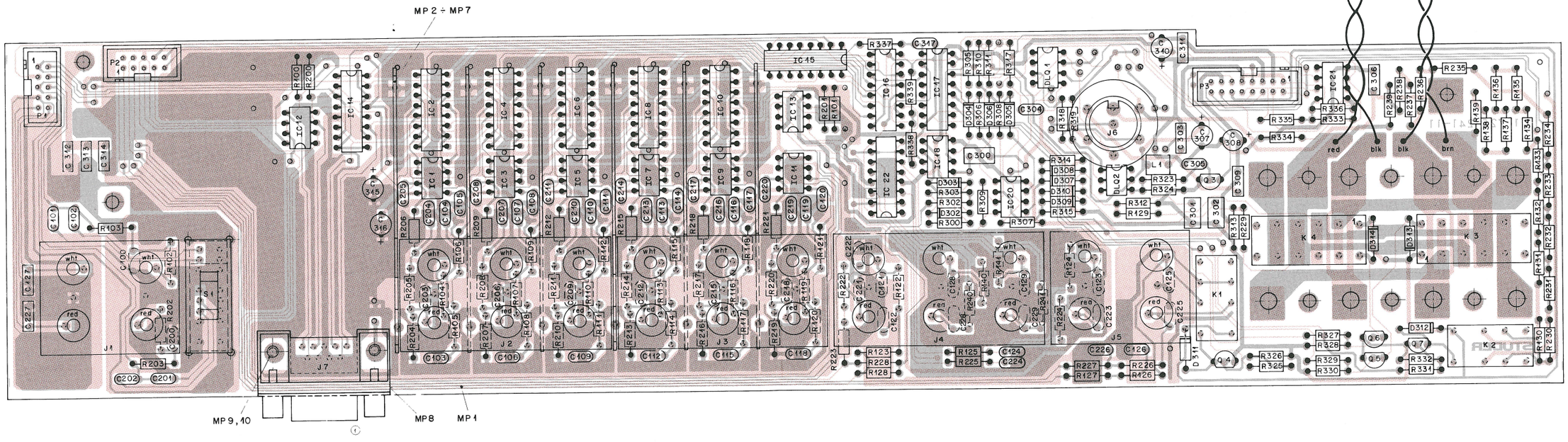

## INPUT/OUTPUT PCB 1.725.241.81 B250 (-S)

| IND. | POS.NO. | PART NO. | VALUE | SPECIFICATIONS / EQUIVALENT | MANUF. |
|---|---|---|---|---|---|
| | C...100 | 59.34.2470 | 47 pF | 10%, 25V, Cer | |
| | C...101 | 59.34.4101 | 100 pF | 10%, 25V, Cer | |
| | C...102 | 59.34.5391 | 390 pF | 10%, 25V, Cer | |
| | C...103 | 59.34.4101 | 100 pF | 10%, 25V, Cer | |
| | C...104 | 59.34.4101 | 100 pF | 10%, 25V, Cer | |
| | C...105 | 59.34.4101 | 100 pF | 10%, 25V, Cer | |
| | C...106 | 59.34.4101 | 100 pF | 10%, 25V, Cer | |
| | C...107 | 59.34.4101 | 100 pF | 10%, 25V, Cer | |
| | C...108 | 59.34.4101 | 100 pF | 10%, 25V, Cer | |
| | C...109 | 59.34.4101 | 100 pF | 10%, 25V, Cer | |
| | C...110 | 59.34.4101 | 100 pF | 10%, 25V, Cer | |
| | C...111 | 59.34.4101 | 100 pF | 10%, 25V, Cer | |
| | C...112 | 59.34.4101 | 100 pF | 10%, 25V, Cer | |
| | C...113 | 59.34.4101 | 100 pF | 10%, 25V, Cer | |
| | C...114 | 59.34.4101 | 100 pF | 10%, 25V, Cer | |
| | C...115 | 59.34.4101 | 100 pF | 10%, 25V, Cer | |
| | C...116 | 59.34.4101 | 100 pF | 10%, 25V, Cer | |
| | C...117 | 59.34.4101 | 100 pF | 10%, 25V, Cer | |
| | C...118 | 59.34.4101 | 100 pF | 10%, 25V, Cer | |
| | C...119 | 59.34.4101 | 100 pF | 10%, 25V, Cer | |
| | C...120 | 59.34.4101 | 100 pF | 10%, 25V, Cer | |
| | C...121 | 59.34.4101 | 100 pF | 10%, 25V, Cer | |
| | C...122 | 59.34.4101 | 100 pF | 10%, 25V, Cer | |
| | C...123 | 59.34.4101 | 100 pF | 10%, 25V, Cer | |
| | C...124 | 59.34.4101 | 100 pF | 10%, 25V, Cer | |
| | C...125 | 59.34.4101 | 100 pF | 10%, 25V, Cer | |
| | C...126 | 59.34.4101 | 100 pF | 10%, 25V, Cer | |
| | C...127 | 59.06.0103 | 10 nF | 10%, 63V, PETP | |
| | C...128 | 59.34.4151 | 150 pF | 10%, 25V, Cer | |
| | C...129 | 59.34.4151 | 150 pF | 10%, 25V, Cer | |
| | C...200 | 59.34.2470 | 47 pF | 10%, 25V, Cer | |
| | C...201 | 59.34.4101 | 100 pF | 10%, 25V, Cer | |
| | C...202 | 59.34.5391 | 390 pF | 10%, 25V, Cer | |
| | C...203 | 59.34.4101 | 100 pF | 10%, 25V, Cer | |
| | C...204 | 59.34.4101 | 100 pF | 10%, 25V, Cer | |
| | C...205 | 59.34.4101 | 100 pF | 10%, 25V, Cer | |
| | C...206 | 59.34.4101 | 100 pF | 10%, 25V, Cer | |



| IND. | POS.NO. | PART NO. | VALUE | SPECIFICATIONS / EQUIVALENT | MANUF. |
|---|---|---|---|---|---|
| | C...207 | 59.34.4101 | 100 pF | 10%, 25V, Cer | |
| | C...208 | 59.34.4101 | 100 pF | 10%, 25V, Cer | |
| | C...209 | 59.34.4101 | 100 pF | 10%, 25V, Cer | |
| | C...210 | 59.34.4101 | 100 pF | 10%, 25V, Cer | |
| | C...211 | 59.34.4101 | 100 pF | 10%, 25V, Cer | |
| | C...212 | 59.34.4101 | 100 pF | 10%, 25V, Cer | |
| | C...213 | 59.34.4101 | 100 pF | 10%, 25V, Cer | |
| | C...214 | 59.34.4101 | 100 pF | 10%, 25V, Cer | |
| | C...215 | 59.34.4101 | 100 pF | 10%, 25V, Cer | |
| | C...216 | 59.34.4101 | 100 pF | 10%, 25V, Cer | |
| | C...217 | 59.34.4101 | 100 pF | 10%, 25V, Cer | |
| | C...218 | 59.34.4101 | 100 pF | 10%, 25V, Cer | |
| | C...219 | 59.34.4101 | 100 pF | 10%, 25V, Cer | |
| | C...220 | 59.34.4101 | 100 pF | 10%, 25V, Cer | |
| | C...221 | 59.34.4101 | 100 pF | 10%, 25V, Cer | |
| | C...222 | 59.34.4101 | 100 pF | 10%, 25V, Cer | |
| | C...223 | 59.34.4101 | 100 pF | 10%, 25V, Cer | |
| | C...224 | 59.34.4101 | 100 pF | 10%, 25V, Cer | |
| | C...225 | 59.34.4101 | 100 pF | 10%, 25V, Cer | |
| | C...226 | 59.34.4101 | 100 pF | 10%, 25V, Cer | |
| | C...227 | 59.06.0103 | 10 nF | 10%, 63V, PETP | |
| | C...228 | 59.34.4151 | 150 pF | 10%, 25V, Cer | |
| | C...229 | 59.34.4151 | 150 pF | 10%, 25V, Cer | |
| | C...302 | 59.06.0474 | 470 nF | 10%, 63V, PETP | |
| | C...301 | 59.06.0105 | 1.0 uF | 10%, 50V, PETP | |
| | C...302 | 59.06.0105 | 1.0 uF | 10%, 50V, PETP | |
| | C...303 | 59.06.0104 | 0.1 uF | 10%, 63V, PETP | |
| | C...304 | 59.34.4151 | 150 pF | 10%, 25V, Cer | |
| | C...305 | 59.34.2330 | 33 pF | 10%, 25V, Cer | |
| | C...306 | 59.06.0104 | 0.1 uF | 10%, 63V, PETP | |
| | C...307 | 59.22.3101 | 100 uF | -20%, 10V, EL | |
| | C...308 | 59.22.5220 | 22 uF | -20%, 25V, EL | |
| | C...309 | 59.06.0104 | 0.1 uF | 10%, 63V, PETP | |
| | C...310 | 59.22.5220 | 22 uF | -20%, 25V, EL | |
| | C...311 | 59.06.0104 | 0.1 uF | 10%, 63V, PETP | |
| | C...312 | 59.06.0104 | 0.1 uF | 10%, 63V, PETP | |
| | C...313 | 59.06.0104 | 0.1 uF | 10%, 63V, PETP | |



| IND. | POS.NO. | PART NO. | VALUE | SPECIFICATIONS / EQUIVALENT | MANUF. |
|---|---|---|---|---|---|
| | C...314 | 59.06.0104 | 0.1 uF | 10%, 63V, PETP | |
| | C...315 | 59.22.5220 | 22 uF | -20%, 25V, EL | |
| | C...316 | 59.22.5220 | 22 uF | -20%, 25V, EL | |
| | C...317 | 59.34.4101 | 100 pF | 10%, 25V, Cer | |
| | D...302 | 50.04.0125 | 1N 4448 | | |
| | D...303 | 50.04.0125 | 1N 4448 | | |
| | D...304 | 50.04.0125 | 1N 4448 | | |
| | D...305 | 50.04.0125 | 1N 4448 | | |
| | D...306 | 50.04.0125 | 1N 4448 | | |
| | D...307 | 50.04.0125 | 1N 4448 | | |
| | D...308 | 50.04.0125 | 1N 4448 | | |
| | D...309 | 50.04.0125 | 1N 4448 | | |
| | D...310 | 50.04.0125 | 1N 4448 | | |
| | D...311 | 50.04.0125 | 1N 4448 | | |
| | D...312 | 50.04.0125 | 1N 4448 | | |
| | D...313 | 50.04.0125 | 1N 4448 | | |
| | D...314 | 50.04.0125 | 1N 4448 | | |
| | OLJ...1 | 50.99.0111 | MCT-6 | Opto-Coupler Dual | |
| | OLJ...2 | 50.99.0126 | 4 N 28 | Opto-Coupler | |
| | IC....1 | 50.09.0106 | NE 5532AN | Low Noise OP-AMP Dual | Sig |
| | IC....2 | 50.19.0300 | OG 211 CJ | OG 201ACJ SX | MAXIM |
| | IC....3 | 50.09.0106 | NE 5532AN | Low Noise OP-AMP Dual | Sig |
| | IC....4 | 50.19.0300 | OG 211 CJ | OG 201ACJ SX | MAXIM |
| | IC....5 | 50.09.0106 | NE 5532AN | Low Noise OP-AMP Dual. | Sig |
| | IC....6 | 50.19.0300 | OG 211 CJ | OG 201ACJ SX | MAXIM |
| | IC....7 | 50.09.0106 | NE 5532AN | Low Noise OP-AMP Dual | Sig |
| | IC....8 | 50.19.0300 | OG 211 CJ | OG 201ACJ SX | MAXIM |
| | IC....9 | 50.09.0106 | NE 5532AN | Low Noise OP-AMP Dual | Sig |
| | IC....10 | 50.19.0300 | OG 211 CJ | OG 201ACJ SX | MAXIM |
| | IC....11 | 50.09.0106 | NE 5532AN | Low Noise OP-AMP Dual | Sig |
| | IC....12 | 50.09.0106 | NE 5532AN | Low Noise OP-AMP Dual | Sig |
| | IC....13 | 50.09.0106 | NE 5532AN | Low Noise OP-AMP Dual | Sig |
| | IC....14 | 50.19.0300 | OG 211 CJ | OG 201ACJ SX | MAXIM |
| | IC....15 | 50.07.0018 | MC 14094B | HEF 4094B | Mot.Ph |



| IND. | POS.NO. | PART NO. | VALUE | SPECIFICATIONS / EQUIVALENT | MANUF. |
|---|---|---|---|---|---|
| | P.....3 | 54.14.2002 | 16 pole | Flat Cable Connector | |
| | Q.....3 | 50.03.0436 | BC 237B | NPN | |
| | Q.....4 | 50.03.0436 | BC 237B | NPN | |
| | Q.....5 | 50.03.0436 | BC 237B | NPN | |
| | Q.....6 | 50.03.0436 | BC 237B | NPN | |
| | Q.....7 | 50.03.0436 | BC 237B | NPN | |
| | R...100 | 57.11.4474 | 470 KOhm | 2%, 0.25W, MF | |
| | R...101 | 57.11.4474 | 470 KOhm | 2%, 0.25W, MF | |
| | R...102 | 57.11.4122 | 1.2 KOhm | 2%, 0.25W, MF | |
| | R...103 | 57.11.4101 | 100 Ohm | 2%, 0.25W, MF | |
| | R...104 | 57.11.4473 | 47 KOhm | 2%, 0.25W, MF | |
| | R...105 | 57.11.4561 | 560 Ohm | 2%, 0.25W, MF | |
| | R...106 | 57.11.4561 | 560 Ohm | 2%, 0.25W, MF | |
| | R...107 | 57.11.4473 | 47 KOhm | 2%, 0.25W, MF | |
| | R...108 | 57.11.4561 | 560 Ohm | 2%, 0.25W, MF | |
| | R...109 | 57.11.4561 | 560 Ohm | 2%, 0.25W, MF | |
| | R...110 | 57.11.4473 | 47 KOhm | 2%, 0.25W, MF | |
| | R...111 | 57.11.4561 | 560 Ohm | 2%, 0.25W, MF | |
| | R...112 | 57.11.4561 | 560 Ohm | 2%, 0.25W, MF | |
| | R...113 | 57.11.4473 | 47 KOhm | 2%, 0.25W, MF | |
| | R...114 | 57.11.4561 | 560 Ohm | 2%, 0.25W, MF | |
| | R...115 | 57.11.4561 | 560 Ohm | 2%, 0.25W, MF | |
| | R...116 | 57.11.4473 | 47 KOhm | 2%, 0.25W, MF | |
| | R...117 | 57.11.4561 | 560 Ohm | 2%, 0.25W, MF | |
| | R...118 | 57.11.4561 | 560 Ohm | 2%, 0.25W, MF | |
| | R...119 | 57.11.4473 | 47 KOhm | 2%, 0.25W, MF | |
| | R...120 | 57.11.4561 | 560 Ohm | 2%, 0.25W, MF | |
| | R...121 | 57.11.4561 | 560 Ohm | 2%, 0.25W, MF | |
| | R...122 | 57.11.4221 | 220 Ohm | 2%, 0.25W, MF | |
| | R...123 | 57.11.4221 | 220 Ohm | 2%, 0.25W, MF | |
| | R...124 | 57.11.4221 | 220 Ohm | 2%, 0.25W, MF | |
| | R...125 | 57.11.4221 | 220 Ohm | 2%, 0.25W, MF | |
| | R...126 | 57.11.4221 | 220 Ohm | 2%, 0.25W, MF | |
| | R...127 | 57.11.4221 | 220 Ohm | 2%, 0.25W, MF | |
| | R...128 | 57.11.4103 | 10 KOhm | 2%, 0.25W, MF | |



| IND. | POS.NO. | PART NO. | VALUE | SPECIFICATIONS / EQUIVALENT | MANUF. |
|---|---|---|---|---|---|
| | R...129 | 57.11.4274 | 270 KOhm | 2%, 0.25W, MF | |
| | R...130 | 57.11.3431 | 430 Ohm | 2%, 0.25W, MF | |
| | R...131 | 57.11.3910 | 91 Ohm | 2%, 0.25W, MF | |
| | R...132 | 57.11.3910 | 91 Ohm | 2%, 0.25W, MF | |
| | R...133 | 57.11.3910 | 91 Ohm | 2%, 0.25W, MF | |
| | R...134 | 57.11.3910 | 91 Ohm | 2%, 0.25W, MF | |
| | R...135 | 57.11.3910 | 91 Ohm | 2%, 0.25W, MF | |
| | R...136 | 57.11.3910 | 91 Ohm | 2%, 0.25W, MF | |
| | R...137 | 57.11.3910 | 91 Ohm | 2%, 0.25W, MF | |
| | R...138 | 57.11.3910 | 91 Ohm | 2%, 0.25W, MF | |
| | R...139 | 57.11.3910 | 91 Ohm | 2%, 0.25W, MF | |
| | R...140 | 57.11.3431 | 430 Ohm | 2%, 0.25W, MF | |
| | R...141 | 57.11.3431 | 430 Ohm | 2%, 0.25W, MF | |
| | R...200 | 57.11.4474 | 470 KOhm | 2%, 0.25W, MF | |
| | R...201 | 57.11.4474 | 470 KOhm | 2%, 0.25W, MF | |
| | R...202 | 57.11.4122 | 1.2 KOhm | 2%, 0.25W, MF | |
| | R...203 | 57.11.4101 | 100 Ohm | 2%, 0.25W, MF | |
| | R...204 | 57.11.4473 | 47 KOhm | 2%, 0.25W, MF | |
| | R...205 | 57.11.4561 | 560 Ohm | 2%, 0.25W, MF | |
| | R...206 | 57.11.4561 | 560 Ohm | 2%, 0.25W, MF | |
| | R...207 | 57.11.4473 | 47 KOhm | 2%, 0.25W, MF | |
| | R...208 | 57.11.4561 | 560 Ohm | 2%, 0.25W, MF | |
| | R...209 | 57.11.4561 | 560 Ohm | 2%, 0.25W, MF | |
| | R...210 | 57.11.4473 | 47 KOhm | 2%, 0.25W, MF | |
| | R...211 | 57.11.4561 | 560 Ohm | 2%, 0.25W, MF | |
| | R...212 | 57.11.4561 | 560 Ohm | 2%, 0.25W, MF | |
| | R...213 | 57.11.4473 | 47 KOhm | 2%, 0.25W, MF | |
| | R...214 | 57.11.4561 | 560 Ohm | 2%, 0.25W, MF | |
| | R...215 | 57.11.4561 | 560 Ohm | 2%, 0.25W, MF | |
| | R...216 | 57.11.4473 | 47 KOhm | 2%, 0.25W, MF | |
| | R...217 | 57.11.4561 | 560 Ohm | 2%, 0.25W, MF | |
| | R...218 | 57.11.4561 | 560 Ohm | 2%, 0.25W, MF | |
| | R...219 | 57.11.4473 | 47 KOhm | 2%, 0.25W, MF | |
| | R...220 | 57.11.4561 | 560 Ohm | 2%, 0.25W, MF | |
| | R...221 | 57.11.4561 | 560 Ohm | 2%, 0.25W, MF | |
| | R...222 | 57.11.4221 | 220 Ohm | 2%, 0.25W, MF | |
| | R...223 | 57.11.4221 | 220 Ohm | 2%, 0.25W, MF | |



| IND. | POS.NO. | PART NO. | VALUE | SPECIFICATIONS / EQUIVALENT | MANUF. |
|---|---|---|---|---|---|
| | IC...16 | 50.07.0018 | MC 14094B | HEF 4094B | Mot.Ph |
| | IC...17 | 50.07.0018 | MC 14094B | HEF 4094B | Mot.Ph |
| | IC...18 | 50.09.0101 | TL 072ACP | LF 353 | TI.NS |
| | IC...20 | 50.09.0101 | TL 072ACP | LF 353 | TI.NS |
| | IC...21 | 50.05.0283 | LM 393 | Low Power Comparator Dual | TI |
| | IC...22 | 50.19.0300 | OG 211 CJ | OG 201ACJ SX | MAXIM |
| | J.....1 | 54.21.2013 | 4-pole | Pin Jacks | WAKA |
| | J.....2 | 54.21.2014 | 6-pole | Pin Jacks | WAKA |
| | J.....3 | 54.21.2014 | 6-pole | Pin Jacks | |
| | J.....4 | 54.21.2014 | 6-pole | Pin Jacks | |
| | J.....5 | 54.21.2013 | 4-pole | Pin Jacks | |
| | J.....6 | 54.21.4199 | 6-pole | Connector DIN | WAKA |
| | J.....7 | 54.99.0204 | 9-pole | Connector D-Type Female | |
| | K.....1 | 56.04.0161 | | 24 V, 2A, 1100 Ohm | Zettler, Omron |
| | K.....2 | 56.04.0161 | | 24 V, 2A, 1100 Ohm | Zettler, Omron |
| | K.....3 | 56.04.0132 | | 24 V, 5A, 285Ω Ohm | SDS |
| | K.....4 | 56.04.0132 | | 24 V, 5A, 285Ω Ohm | SDS |
| | L.....1 | 62.02.3220 | 22 uH | HF-Choke R < 1.4 Ohm, I dc=200 mA | |
| | MP....1 | 1.725.241.11 | | Input-Output PCB | |
| | MP....2 | 1.725.240.01 | | Screen | |
| | MP....3 | 1.725.240.01 | | Screen | |
| | MP....4 | 1.725.240.01 | | Screen | |
| | MP....5 | 1.725.240.01 | | Screen | |
| | MP....6 | 1.725.240.01 | | Screen | |
| | MP....7 | 1.725.240.01 | | Screen | |
| | MP....8 | 1.725.241.01 | | Insulator | |
| | MP....9 | 21.38.0355 | | Screw M3 * 8 | |
| | MP....10 | 21.38.0355 | | Screw M3 * 8 | |
| | MP....11 | 54.25.0302 | 2-pole | Power Connector | |
| | MP....12 | 54.25.0302 | 2-pole | Power Connector | |
| | P.....1 | 54.14.2001 | 10 pole | Flat Cable Connector | |
| | P.....2 | 54.14.2001 | 10 pole | Flat Cable Connector | |



| IND. | POS.NO. | PART NO. | VALUE | SPECIFICATIONS / EQUIVALENT | MANUF. |
|---|---|---|---|---|---|
| | R...224 | 57.11.4221 | 220 Ohm | 2%, 0.25W, MF | |
| | R...225 | 57.11.4221 | 220 Ohm | 2%, 0.25W, MF | |
| | R...226 | 57.11.4221 | 220 Ohm | 2%, 0.25W, MF | |
| | R...227 | 57.11.4221 | 220 Ohm | 2%, 0.25W, MF | |
| | R...228 | 57.11.4103 | 10 KOhm | 2%, 0.25W, MF | |
| | R...229 | 57.11.4274 | 270 KOhm | 2%, 0.25W, MF | |
| | R...230 | 57.11.3431 | 430 Ohm | 2%, 0.25W, MF | |
| | R...231 | 57.11.3910 | 91 Ohm | 2%, 0.25W, MF | |
| | R...232 | 57.11.3910 | 91 Ohm | 2%, 0.25W, MF | |
| | R...233 | 57.11.3910 | 91 Ohm | 2%, 0.25W, MF | |
| | R...234 | 57.11.3910 | 91 Ohm | 2%, 0.25W, MF | |
| | R...235 | 57.11.3910 | 91 Ohm | 2%, 0.25W, MF | |
| | R...236 | 57.11.3910 | 91 Ohm | 2%, 0.25W, MF | |
| | R...237 | 57.11.3910 | 91 Ohm | 2%, 0.25W, MF | |
| | R...238 | 57.11.3910 | 91 Ohm | 2%, 0.25W, MF | |
| | R...239 | 57.11.3910 | 91 Ohm | 2%, 0.25W, MF | |
| | R...240 | 57.11.3431 | 430 Ohm | 2%, 0.25W, MF | |
| | R...241 | 57.11.3431 | 430 Ohm | 2%, 0.25W, MF | |
| | R...300 | 57.11.4222 | 2.2 KOhm | 2%, 0.25W, MF | |
| | R...302 | 57.11.3514 | 510 KOhm | 2%, 0.25W, MF | |
| | R...303 | 57.11.4125 | 1.2 MOhm | 2%, 0.25W, MF | |
| | R...305 | 57.11.4152 | 1.5 KOhm | 2%, 0.25W, MF | |
| | R...306 | 57.11.4821 | 820 Ohm | 2%, 0.25W, MF | |
| | R...307 | 57.11.4184 | 180 KOhm | 2%, 0.25W, MF | |
| | R...308 | 57.11.4104 | 100 KOhm | 2%, 0.25W, MF | |
| | R...309 | 57.11.4184 | 180 KOhm | 2%, 0.25W, MF | |
| | R...310 | 57.11.4153 | 15 KOhm | 2%, 0.25W, MF | |
| | R...311 | 57.11.4392 | 3.9 KOhm | 2%, 0.25W, MF | |
| | R...312 | 57.11.4225 | 2.2 MOhm | 2%, 0.25W, MF | |
| | R...313 | 57.11.4225 | 2.2 MOhm | 2%, 0.25W, MF | |
| | R...314 | 57.11.4225 | 2.2 MOhm | 2%, 0.25W, MF | |
| | R...315 | 57.11.4225 | 2.2 MOhm | 2%, 0.25W, MF | |
| | R...317 | 57.11.4332 | 3.3 KOhm | 2%, 0.25W, MF | |
| | R...318 | 57.11.4331 | 330 Ohm | 2%, 0.25W, MF | |
| | R...319 | 57.11.4821 | 820 Ohm | 2%, 0.25W, MF | |
| | R...323 | 57.11.4103 | 10 KOhm | 2%, 0.25W, MF | |
| | R...324 | 57.11.4333 | 33 KOhm | 2%, 0.25W, MF | |



| IND. | POS.NO. | PART NO. | VALUE | SPECIFICATIONS / EQUIVALENT | MANUF. |
|---|---|---|---|---|---|
| | R...325 | 57.11.4103 | 10 KOhm | 2%, 0.25W, MF | |
| | R...326 | 57.11.4103 | 10 KOhm | 2%, 0.25W, MF | |
| | R...327 | 57.11.4103 | 10 KOhm | 2%, 0.25W, MF | |
| | R...328 | 57.11.4103 | 10 KOhm | 2%, 0.25W, MF | |
| | R...329 | 57.11.4103 | 10 KOhm | 2%, 0.25W, MF | |
| | R...330 | 57.11.4103 | 10 KOhm | 2%, 0.25W, MF | |
| | R...331 | 57.11.4103 | 10 KOhm | 2%, 0.25W, MF | |
| | R...332 | 57.11.4103 | 10 KOhm | 2%, 0.25W, MF | |
| | R...333 | 57.11.4104 | 100 KOhm | 2%, 0.25W, MF | |
| | R...334 | 57.11.4124 | 120 KOhm | 2%, 0.25W, MF | |
| | R...335 | 57.11.4392 | 3.9 KOhm | 2%, 0.25W, MF | |
| | R...336 | 57.11.4223 | 22 KOhm | 2%, 0.25W, MF | |
| | R...337 | 57.11.4472 | 4.7 KOhm | 2%, 0.25W, MF | |
| | R...338 | 57.11.3163 | 16 KOhm | 2%, 0.25W, MF | |
| | R...339 | 57.11.4562 | 5.6 KOhm | 2%, 0.25W, MF | |
| | S.....1 | 55.12.0006 | | Switch 4#3 | |
| | W.....1 | 1.725.240.93 | | Wiring List | |



| IND. | POS.NO. | PART NO. | VALUE | SPECIFICATIONS / EQUIVALENT | MANUF. |
|---|---|---|---|---|---|

Left Channel: NO. 100 ...
Right Channel: NO. 200 ...
Both Channel: NO. 300 ... + NO. 1 ...

MF=Metalfilm
Cer=Ceramic
PETP=Polyester
EL=Electrolytic

MANUFACTURER: WAKA, St=Studer, Mot=Motorola, To=Toshiba
SX=Siliconix, Ph=Philips, NS=National Semiconductors
Ha=Harris, TI=Texas Instruments, Ra=Raytheon,
Sig=Signetics

ORIG 88/02/29

## PHONO PCB MM 1.725.255.00 B150/B250 (–S)

MC–OPTION FOR B250/B250–S ONLY SEE
"PHONO PCB MM+MC B250/B250–S 1.725.250.00"

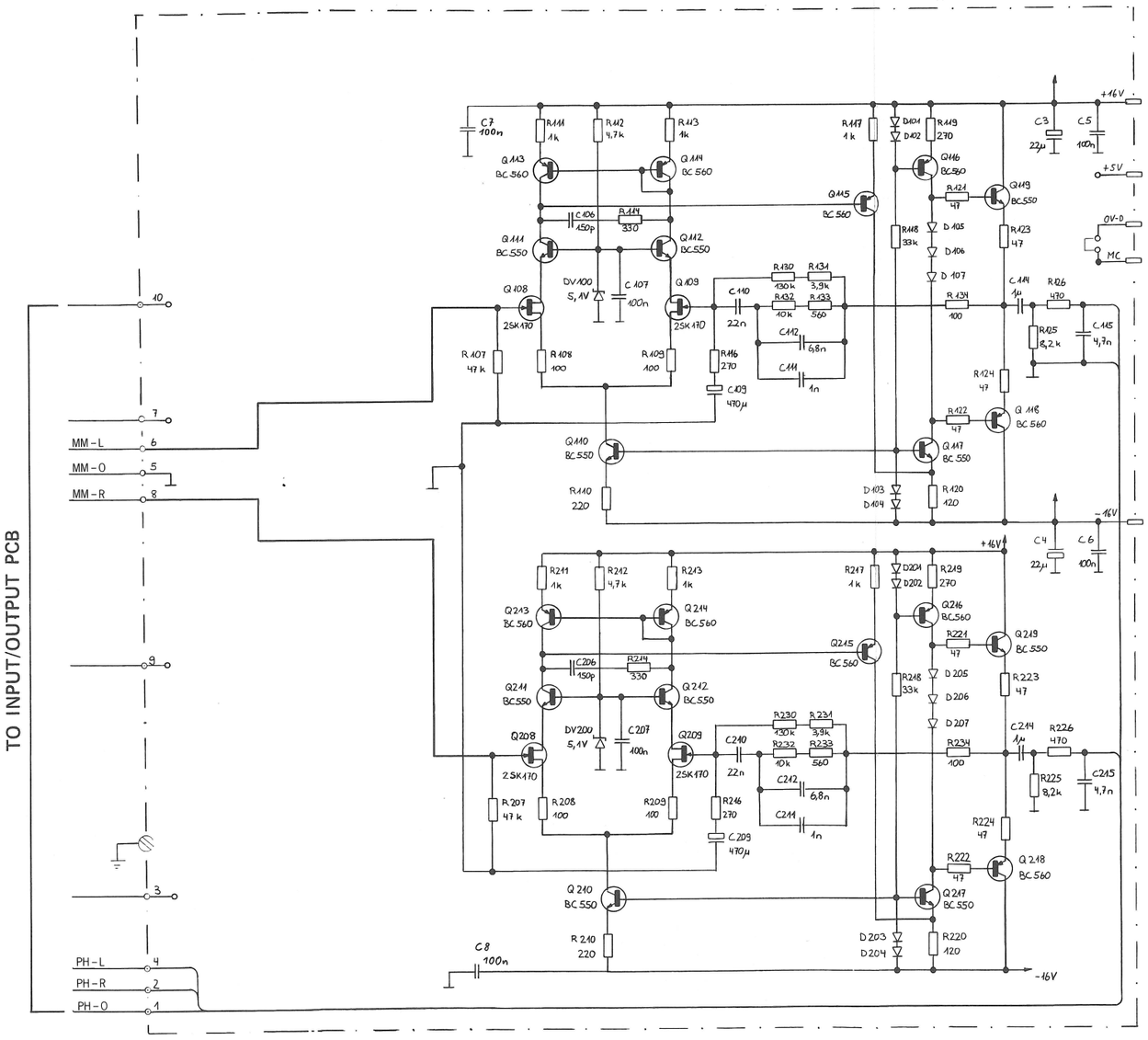


INTERCONNECTION PCB
1.725.280/285.00

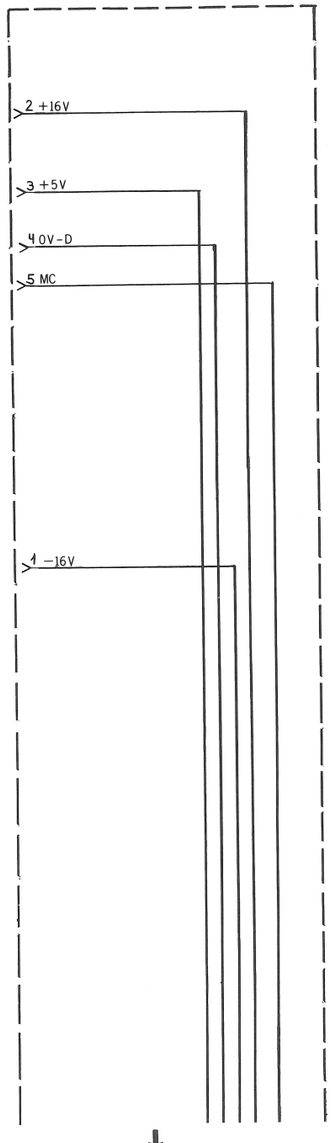


SEE
PREAMPLIFIER PCB

| | | | | |
|---|---|---|---|---|
| 0 30.6.86 Hartwig | 1 09.05.87 SP | 2 13.08.87 SP | 3 3.11.87 He | . . |
| | AMPLIFIER B250 | | | PAGE 1 OF 3 |
| STUDER | PHONO UNIT | | SC | 1.725.250.00 |

## PHONO PCB MM 1.725.255.00 B150/B250 (-S)

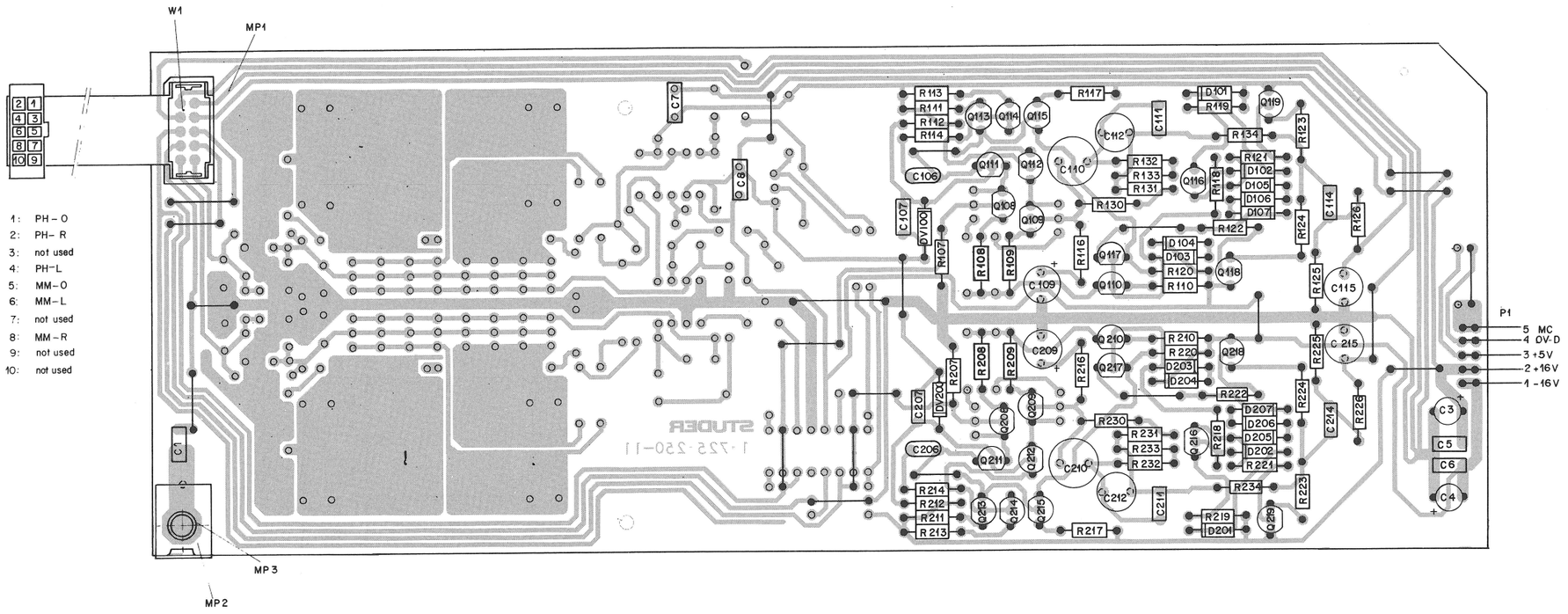


| IND. | POS.NO. | PART NO. | VALUE | SPECIFICATIONS / EQUIVALENT | MANUF. |
|---|---|---|---|---|---|
| | D...207 | 50.04.0125 | 1N 4448 | any | |
| | DV..100 | 50.04.1112 | Z 5.1V | 5 %, 0.4 W | |
| | DV..200 | 50.04.1112 | Z 5.1V | 5 %, 0.4 W | |
| | MP....1 | 1.725.250.11 | | Phono Unit PCB | |
| | MP....2 | 1.726.780.01 | | Holder | |
| | MP....3 | 28.21.1450 | | Tubular Rivet | |
| | P.....1 | 54.31.0269 | 5-POLE | CIS Pin-Strip | |
| | Q....108 | 50.03.0215 | 2SK170 | FET | TO |
| | Q....109 | 50.03.0215 | 2SK170 | FET | TO |
| | Q....110 | 50.03.0497 | BC 550 | NPN | |
| | Q....111 | 50.03.0497 | BC 550 | NPN | |
| | Q....112 | 50.03.0497 | BC 550 | NPN | |
| | Q....113 | 50.03.0496 | BC 560 | PNP | |
| | Q....114 | 50.03.0496 | BC 560 | PNP | |
| | Q....115 | 50.03.0496 | BC 560 | PNP | |
| | Q....116 | 50.03.0496 | BC 560 | PNP | |
| | Q....117 | 50.03.0497 | BC 550 | NPN | |
| | Q....118 | 50.03.0496 | BC 560 | PNP | |
| | Q....119 | 50.03.0497 | BC 550 | NPN | |
| | Q....208 | 50.03.0215 | 2SK170 | FET | TO |
| | Q....209 | 50.03.0215 | 2SK170 | FET | TO |
| | Q....210 | 50.03.0497 | BC 550 | NPN | |
| | Q....211 | 50.03.0497 | BC 550 | NPN | |
| | Q....212 | 50.03.0497 | BC 550 | NPN | |
| | Q....213 | 50.03.0496 | BC 560 | PNP | |
| | Q....214 | 50.03.0496 | BC 560 | PNP | |
| | Q....215 | 50.03.0496 | BC 560 | PNP | |
| | Q....216 | 50.03.0496 | BC 560 | PNP | |
| | Q....217 | 50.03.0497 | BC 550 | NPN | |
| | Q....218 | 50.03.0496 | BC 560 | PNP | |
| | Q....219 | 50.03.0497 | BC 550 | NPN | |
| | R....107 | 57.11.4473 | 47 KOhm | 2%, 0.25W, MF | |



| IND. | POS.NO. | PART NO. | VALUE | SPECIFICATIONS / EQUIVALENT | MANUF. |
|---|---|---|---|---|---|
| (01) | R....108 | 57.11.4101 | 100 Ohm | 2%, 0.25W, MF | |
| (01) | R....109 | 57.11.4101 | 100 Ohm | 2%, 0.25W, MF | |
| | R....110 | 57.11.4221 | 220 Ohm | 2%, 0.25W, MF | |
| | R....111 | 57.11.4102 | 1 KOhm | 2%, 0.25W, MF | |
| | R....112 | 57.11.4472 | 4.7 KOhm | 2%, 0.25W, MF | |
| | R....113 | 57.11.4102 | 1 KOhm | 2%, 0.25W, MF | |
| | R....114 | 57.11.4331 | 330 Ohm | 2%, 0.25W, MF | |
| | R....116 | 57.11.4271 | 270 Ohm | 2%, 0.25W, MF | |
| | R....117 | 57.11.4102 | 1 KOhm | 2%, 0.25W, MF | |
| | R....118 | 57.11.4333 | 33 KOhm | 2%, 0.25W, MF | |
| | R....119 | 57.11.4271 | 270 Ohm | 2%, 0.25W, MF | |
| | R....120 | 57.11.4121 | 120 Ohm | 2%, 0.25W, MF | |
| | R....121 | 57.11.4470 | 47 Ohm | 2%, 0.25W, MF | |
| | R....122 | 57.11.4470 | 47 Ohm | 2%, 0.25W, MF | |
| | R....123 | 57.11.4470 | 47 Ohm | 2%, 0.25W, MF | |
| | R....124 | 57.11.4470 | 47 Ohm | 2%, 0.25W, MF | |
| | R....125 | 57.11.4822 | 8.2 KOhm | 2%, 0.25W, MF | |
| | R....126 | 57.11.4471 | 470 Ohm | 2%, 0.25W, MF | |
| | R....130 | 57.11.3134 | 130 KOhm | 2%, 0.25W, MF | |
| | R....131 | 57.11.4392 | 3.9 KOhm | 2%, 0.25W, MF | |
| | R....132 | 57.11.4103 | 10 KOhm | 2%, 0.25W, MF | |
| | R....133 | 57.11.4561 | 560 Ohm | 2%, 0.25W, MF | |
| | R....134 | 57.11.4101 | 100 Ohm | 2%, 0.25W, MF | |
| | R....207 | 57.11.4473 | 47 KOhm | 2%, 0.25W, MF | |
| (01) | R....208 | 57.11.4101 | 100 Ohm | 2%, 0.25W, MF | |
| (01) | R....209 | 57.11.4101 | 100 Ohm | 2%, 0.25W, MF | |
| | R....210 | 57.11.4221 | 220 Ohm | 2%, 0.25W, MF | |
| | R....211 | 57.11.4102 | 1 KOhm | 2%, 0.25W, MF | |
| | R....212 | 57.11.4472 | 4.7 KOhm | 2%, 0.25W, MF | |
| | R....213 | 57.11.4102 | 1 KOhm | 2%, 0.25W, MF | |
| | R....214 | 57.11.4331 | 330 Ohm | 2%, 0.25W, MF | |
| | R....216 | 57.11.4271 | 270 Ohm | 2%, 0.25W, MF | |
| | R....217 | 57.11.4102 | 1 KOhm | 2%, 0.25W, MF | |
| | R....218 | 57.11.4333 | 33 KOhm | 2%, 0.25W, MF | |
| | R....219 | 57.11.4271 | 270 Ohm | 2%, 0.25W, MF | |
| | R....220 | 57.11.4121 | 120 Ohm | 2%, 0.25W, MF | |
| | R....221 | 57.11.4473 | 47 Ohm | 2%, 0.25W, MF | |



| IND. | POS.NO. | PART NO. | VALUE | SPECIFICATIONS / EQUIVALENT | MANUF. |
|---|---|---|---|---|---|
| | C....1 | 59.06.0104 | 0.1 uF | 10%, 25V, PETP | |
| | C....3 | 59.22.5220 | 22 uF | -20%, 25V, EL | |
| | C....4 | 59.22.5220 | 22 uF | -20%, 25V, EL | |
| | C....5 | 59.06.0104 | 0.1 uF | 10%, 25V, PETP | |
| | C....6 | 59.06.0104 | 0.1 uF | 10%, 25V, PETP | |
| (02) | C....7 | 59.06.0104 | 0.1 uF | 10%, 25V, PETP | |
| (02) | C....8 | 59.06.0104 | 0.1 uF | 10%, 25V, PETP | |
| | C...106 | 59.34.4151 | 150 pF | 10%, 25V, CER | |
| | C...107 | 59.06.0104 | 0.1 uF | 10%, 25V, PETP | |
| | C...109 | 59.22.2471 | 470 uF | -20%, 6V, EL | |
| | C...110 | 59.05.2223 | 22 nF | 2.5%, 25V, PP | |
| | C...111 | 59.06.5102 | 1 nF | 5%, 25V, PETP | |
| | C...112 | 59.05.2682 | 6.8 nF | 2.5%, 25V, PP | |
| | C...114 | 59.06.5105 | 1 uF | 5%, 25V, PETP | |
| | C...115 | 59.05.2472 | 4.7 nF | 2.5%, 25V, PP | |
| | C...206 | 59.34.4151 | 150 pF | 10%, 25V, CER | |
| | C...207 | 59.06.0104 | 0.1 uF | 10%, 25V, PETP | |
| | C...209 | 59.22.2471 | 470 uF | -20%, 6V, EL | |
| | C...210 | 59.05.2223 | 22 nF | 2.5%, 25V, PP | |
| | C...211 | 59.06.5102 | 1 nF | 5%, 25V, PETP | |
| | C...212 | 59.05.2582 | 6.8 nF | 2.5%, 25V, PP | |
| | C...214 | 59.06.5105 | 1 uF | 5%, 25V, PETP | |
| | C...215 | 59.05.2472 | 4.7 nF | 2.5%, 25V, PP | |
| | D...101 | 50.04.0125 | 1N 4448 | any | |
| | D...102 | 50.04.0125 | 1N 4448 | any | |
| | D...103 | 50.04.0125 | 1N 4448 | any | |
| | D...104 | 50.04.0125 | 1N 4448 | any | |
| | D...105 | 50.04.0125 | 1N 4448 | any | |
| | D...106 | 50.04.0125 | 1N 4448 | any | |
| | D...107 | 50.04.0125 | 1N 4448 | any | |
| | D...201 | 50.04.0125 | 1N 4448 | any | |
| | D...202 | 50.04.0125 | 1N 4448 | any | |
| | D...203 | 50.04.0125 | 1N 4448 | any | |
| | D...204 | 50.04.0125 | 1N 4448 | any | |
| | D...205 | 50.04.0125 | 1N 4448 | any | |
| | D...206 | 50.04.0125 | 1N 4448 | any | |



| IND. | POS.NO. | PART NO. | VALUE | SPECIFICATIONS / EQUIVALENT | MANUF. |
|---|---|---|---|---|---|
| | R....222 | 57.11.4470 | 47 Ohm | 2%, 0.25W, MF | |
| | R....223 | 57.11.4473 | 47 Ohm | 2%, 0.25W, MF | |
| | R....224 | 57.11.4470 | 47 Ohm | 2%, 0.25W, MF | |
| | R....225 | 57.11.4822 | 8.2 KOhm | 2%, 0.25W, MF | |
| | R....226 | 57.11.4471 | 470 Ohm | 2%, 0.25W, MF | |
| | R....230 | 57.11.3134 | 130 KOhm | 2%, 0.25W, MF | |
| | R....231 | 57.11.4392 | 3.9 KOhm | 2%, 0.25W, MF | |
| | R....232 | 57.11.4103 | 10 KOhm | 2%, 0.25W, MF | |
| | R....233 | 57.11.4561 | 560 Ohm | 2%, 0.25W, MF | |
| | R....234 | 57.11.4101 | 100 Ohm | 2%, 0.25W, MF | |
| | W.....1 | 1.023.310.01 | | Flat Cable | |

(01) Improvement for FTZ requirement
(02) Anti swing capacitor

Left Channel: 100....
Right Channel: 200....
Both : 1....

EL=Electrolytic, CER=Ceramic, PETP=Polyester, PP=Polypropylen

MF=Metal Film

MANUFACTURER: TO=Toshiba

ORIG 87/05/07 (01) 87/08/13 (02) 87/11/03

## PHONO PCB MM+MC 1.725.250.00 B250 (–S)

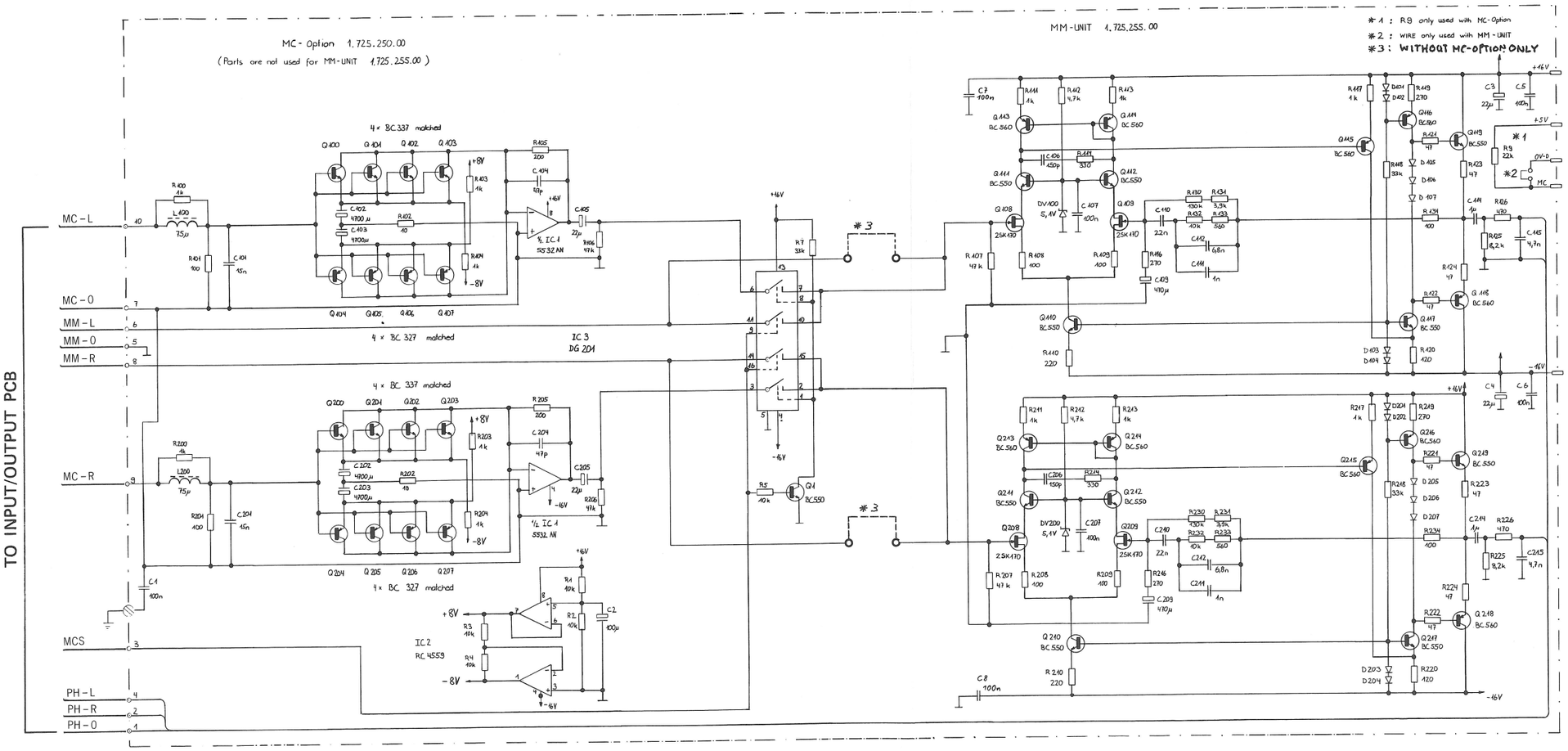


INTERCONNECTION PCB 1.725.280.00

2 +16V
3 +5V
4 0V-D
5 MC
1 -16V

| | | | | |
|---|---|---|---|---|
| 0 30.6.86 Hartwig | 1 07.05.87 SP | 2 13.08.87 SP | 3 3.11.87 Ha | . . |
| | AMPLIFIER B250 | | | PAGE 1 OF 3 |
| STUDER | PHONO UNIT | | SC | 1.725.250.00 |

## PHONO PCB MM+MC 1.725.250.00 B250 (–S)

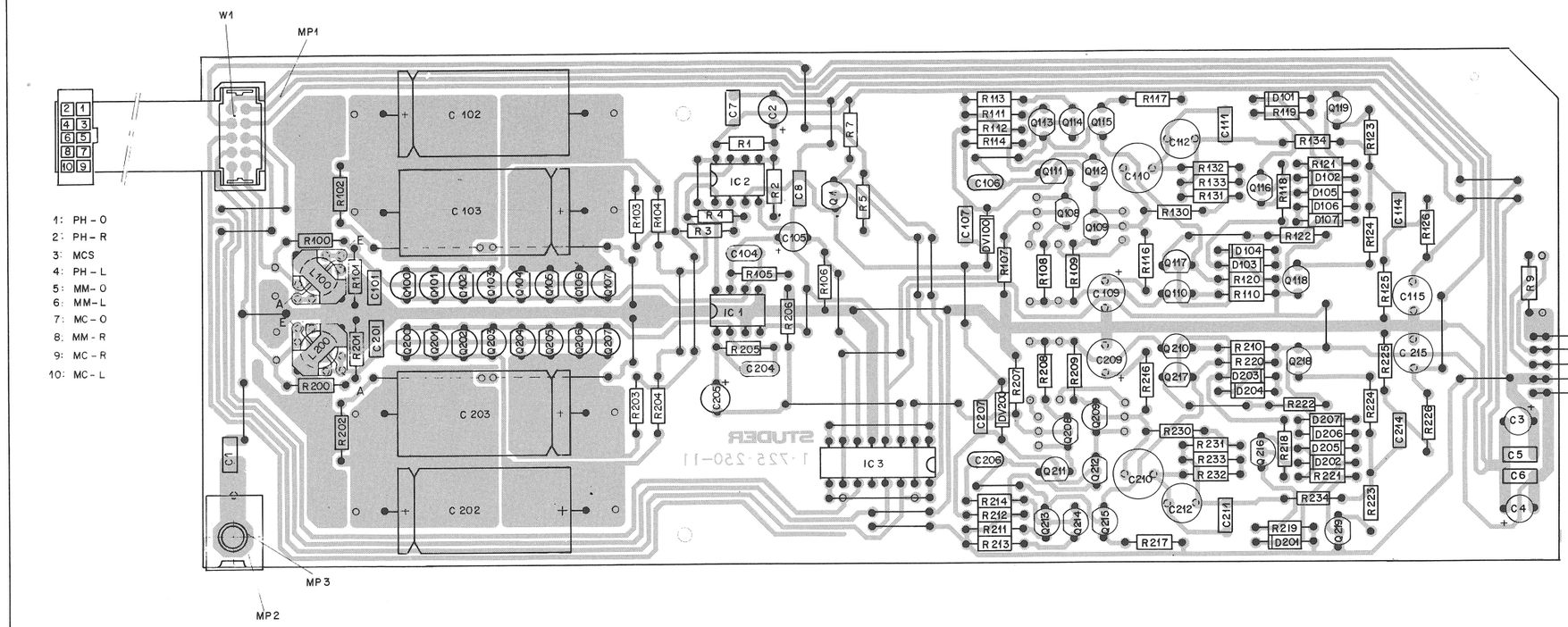


| IND. | POS.NO. | PART NO. | VALUE | SPECIFICATIONS / EQUIVALENT | MANUF. |
|---|---|---|---|---|---|
| | R.....4 | 57.111.4103 | 10 KOhm | 2%, 0.25W, MF | |
| | R.....5 | 57.111.4103 | 10 KOhm | 2%, 0.25W, MF | |
| | R.....7 | 57.111.4333 | 33 KOhm | 2%, 0.25W, MF | |
| | R.....9 | 57.111.4223 | 22 KOhm | 2%, 0.25W, MF | |
| | R...100 | 57.111.4102 | 1 KOhm | 2%, 0.25W, MF | |
| | R...101 | 57.111.4101 | 100 Ohm | 2%, 0.25W, MF | |
| | R...102 | 57.111.4100 | 10 Ohm | 2%, 0.25W, MF | |
| | R...103 | 57.111.4102 | 1 KOhm | 2%, 0.25W, MF | |
| | R...104 | 57.111.4102 | 1 KOhm | 2%, 0.25W, MF | |
| | R...105 | 57.111.3201 | 200 Ohm | 2%, 0.25W, MF | |
| | R...106 | 57.111.4473 | 47 KOhm | 2%, 0.25W, MF | |
| | R...107 | 57.111.4473 | 47 KOhm | 2%, 0.25W, MF | |
| (01) | R...108 | 57.111.4101 | 100 Ohm | 2%, 0.25W, MF | |
| (01) | R...109 | 57.111.4101 | 100 Ohm | 2%, 0.25W, MF | |
| | R...110 | 57.111.4221 | 220 Ohm | 2%, 0.25W, MF | |
| | R...111 | 57.111.4102 | 1 KOhm | 2%, 0.25W, MF | |
| | R...112 | 57.111.4472 | 4.7 KOhm | 2%, 0.25W, MF | |
| | R...113 | 57.111.4102 | 1 KOhm | 2%, 0.25W, MF | |
| | R...114 | 57.111.4331 | 330 Ohm | 2%, 0.25W, MF | |
| | R...116 | 57.111.4271 | 270 Ohm | 2%, 0.25W, MF | |
| | R...117 | 57.111.4102 | 1 KOhm | 2%, 0.25W, MF | |
| | R...118 | 57.111.4333 | 33 KOhm | 2%, 0.25W, MF | |
| | R...119 | 57.111.4271 | 270 Ohm | 2%, 0.25W, MF | |
| | R...120 | 57.111.4121 | 120 Ohm | 2%, 0.25W, MF | |
| | R...121 | 57.111.4473 | 47 Ohm | 2%, 0.25W, MF | |
| | R...122 | 57.111.4470 | 47 Ohm | 2%, 0.25W, MF | |
| | R...123 | 57.111.4473 | 47 Ohm | 2%, 0.25W, MF | |
| | R...124 | 57.111.4470 | 47 Ohm | 2%, 0.25W, MF | |
| | R...125 | 57.111.4822 | 8.2 KOhm | 2%, 0.25W, MF | |
| | R...126 | 57.111.4471 | 470 Ohm | 2%, 0.25W, MF | |
| | R...130 | 57.111.3134 | 130 KOhm | 2%, 0.25W, MF | |
| | R...131 | 57.111.4392 | 3.9 KOhm | 2%, 0.25W, MF | |
| | R...132 | 57.111.4103 | 10 KOhm | 2%, 0.25W, MF | |
| | R...133 | 57.111.4561 | 560 Ohm | 2%, 0.25W, MF | |
| | R...134 | 57.111.4101 | 100 Ohm | 2%, 0.25W, MF | |
| | R...200 | 57.111.4102 | 1 KOhm | 2%, 0.25W, MF | |
| | R...201 | 57.111.4131 | 100 Ohm | 2%, 0.25W, MF | |



| IND. | POS.NO. | PART NO. | VALUE | SPECIFICATIONS / EQUIVALENT | MANUF. |
|---|---|---|---|---|---|
| | R...202 | 57.111.4100 | 10 Ohm | 2%, 0.25W, MF | |
| | R...203 | 57.111.4102 | 1 KOhm | 2%, 0.25W, MF | |
| | R...204 | 57.111.4102 | 1 KOhm | 2%, 0.25W, MF | |
| | R...205 | 57.111.3201 | 200 Ohm | 2%, 0.25W, MF | |
| | R...206 | 57.111.4473 | 47 KOhm | 2%, 0.25W, MF | |
| | R...207 | 57.111.4473 | 47 KOhm | 2%, 0.25W, MF | |
| (01) | R...208 | 57.111.4101 | 100 Ohm | 2%, 0.25W, MF | |
| (01) | R...209 | 57.111.4101 | 100 Ohm | 2%, 0.25W, MF | |
| | R...210 | 57.111.4221 | 220 Ohm | 2%, 0.25W, MF | |
| | R...211 | 57.111.4102 | 1 KOhm | 2%, 0.25W, MF | |
| | R...212 | 57.111.4472 | 4.7 KOhm | 2%, 0.25W, MF | |
| | R...213 | 57.111.4102 | 1 KOhm | 2%, 0.25W, MF | |
| | R...214 | 57.111.4331 | 330 Ohm | 2%, 0.25W, MF | |
| | R...216 | 57.111.4271 | 270 Ohm | 2%, 0.25W, MF | |
| | R...217 | 57.111.4102 | 1 KOhm | 2%, 0.25W, MF | |
| | R...218 | 57.111.4333 | 33 KOhm | 2%, 0.25W, MF | |
| | R...219 | 57.111.4271 | 270 Ohm | 2%, 0.25W, MF | |
| | R...220 | 57.111.4121 | 120 Ohm | 2%, 0.25W, MF | |
| | R...221 | 57.111.4473 | 47 Ohm | 2%, 0.25W, MF | |
| | R...222 | 57.111.4470 | 47 Ohm | 2%, 0.25W, MF | |
| | R...223 | 57.111.4470 | 47 Ohm | 2%, 0.25W, MF | |
| | R...224 | 57.111.4470 | 47 Ohm | 2%, 0.25W, MF | |
| | R...225 | 57.111.4822 | 8.2 KOhm | 2%, 0.25W, MF | |
| | R...226 | 57.111.4471 | 470 Ohm | 2%, 0.25W, MF | |
| | R...230 | 57.111.3134 | 130 KOhm | 2%, 0.25W, MF | |
| | R...231 | 57.111.4392 | 3.9 KOhm | 2%, 0.25W, MF | |
| | R...232 | 57.111.4103 | 10 KOhm | 2%, 0.25W, MF | |
| | R...233 | 57.111.4561 | 560 Ohm | 2%, 0.25W, MF | |
| | R...234 | 57.111.4101 | 100 Ohm | 2%, 0.25W, MF | |
| | W.....1 | 1.323.310.01 | | Flat Cable | |



| IND. | POS.NO. | PART NO. | VALUE | SPECIFICATIONS / EQUIVALENT | MANUF. |
|---|---|---|---|---|---|
| | C.....1 | 59.06.0104 | 0.1 uF | 10%, 25V, PETP | |
| | C.....2 | 59.22.5101 | 100 uF | -20%, 25V, EL | |
| | C.....3 | 59.22.5220 | 22 uF | -20%, 25V, EL | |
| | C.....4 | 59.22.5220 | 22 uF | -20%, 25V, EL | |
| | C.....5 | 59.06.0104 | 0.1 uF | 10%, 25V, PETP | |
| | C.....6 | 59.06.0104 | 0.1 uF | 10%, 25V, PETP | |
| | C.....7 | 59.06.0104 | 0.1 uF | 10%, 25V, PETP | |
| | C.....8 | 59.06.0104 | 0.1 uF | 10%, 25V, PETP | |
| | C....101 | 59.06.0153 | 15 nF | 10%, 25V, PETP | |
| | C....102 | 59.25.1472 | 4700uF | -20%, 6V, EL | |
| | C....103 | 59.25.1472 | 4700uF | -20%, 6V, EL | |
| | C....104 | 59.34.2470 | 47 pF | 10%, 25V, CER | |
| | C....105 | 59.22.5220 | 22 uF | -20%, 25V, EL | |
| | C....106 | 59.34.4151 | 150 pF | 10%, 25V, CER | |
| | C....107 | 59.06.0104 | 0.1 uF | 10%, 25V, PETP | |
| | C....109 | 59.22.2471 | 470 uF | -20%, 6V, EL | |
| | C....110 | 59.05.2223 | 22 nF | 2.5%, 25V, PP | |
| | C....111 | 59.06.5102 | 1 nF | 5%, 25V, PETP | |
| | C....112 | 59.05.2682 | 6.8 nF | 2.5%, 25V, PP | |
| | C....114 | 59.06.5105 | 1 uF | 5%, 25V, PETP | |
| | C....115 | 59.05.2472 | 4.7 nF | 2.5%, 25V, PP | |
| | C....201 | 59.06.0153 | 15 nF | 10%, 25V, PETP | |
| | C....202 | 59.25.1472 | 4700uF | -20%, 6V, EL | |
| | C....203 | 59.25.1472 | 4700uF | -20%, 6V, EL | |
| | C....204 | 59.34.2470 | 47 pF | 10%, 25V, CER | |
| | C....205 | 59.22.5220 | 22 uF | -20%, 25V, EL | |
| | C....206 | 59.34.4151 | 150 pF | 10%, 25V, CER | |
| | C....207 | 59.06.0104 | 0.1 uF | 10%, 25V, PETP | |
| | C....209 | 59.22.2471 | 470 uF | -20%, 6V, EL | |
| | C....210 | 59.05.2223 | 22 nF | 2.5%, 25V, PP | |
| | C....211 | 59.06.5102 | 1 nF | 5%, 25V, PETP | |
| | C....212 | 59.05.2682 | 6.8 nF | 2.5%, 25V, PP | |
| | C....214 | 59.06.5105 | 1 uF | 5%, 25V, PETP | |
| | C....215 | 59.05.2472 | 4.7 nF | 2.5%, 25V, PP | |
| | D....101 | 50.04.0125 | 1N 4448 | any | |
| | D....102 | 50.04.0125 | 1N 4448 | any | |



| IND. | POS.NO. | PART NO. | VALUE | SPECIFICATIONS / EQUIVALENT | MANUF. |
|---|---|---|---|---|---|
| | D....103 | 50.04.0125 | 1N 4448 | any | |
| | D....104 | 50.04.0125 | 1N 4448 | any | |
| | D....105 | 50.04.0125 | 1N 4448 | any | |
| | D....106 | 50.04.0125 | 1N 4448 | any | |
| | D....107 | 50.04.0125 | 1N 4448 | any | |
| | D....201 | 50.04.0125 | 1N 4448 | any | |
| | D....202 | 50.04.0125 | 1N 4448 | any | |
| | D....203 | 50.04.0125 | 1N 4448 | any | |
| | D....204 | 50.04.0125 | 1N 4448 | any | |
| | D....205 | 50.04.0125 | 1N 4448 | any | |
| | D....206 | 50.04.0125 | 1N 4448 | any | |
| | D....207 | 50.04.0125 | 1N 4448 | any | |
| | DV...100 | 50.04.1112 | Z 5.1V | 5 %, 0.4 W | |
| | DV...200 | 50.04.1112 | Z 5.1V | 5 %, 0.4 W | |
| | IC....1 | 50.09.0106 | 5532AN | 5532AN | SIG.EX |
| | IC....2 | 50.29.0107 | 4559NB | uPC4559 | RA.NEC |
| | IC....3 | 50.07.0034 | DG201ACJ | HI-201-5 | SX.Ha |
| | L....100 | 1.322.225.00 | 75 uH | | STUDER |
| | L....200 | 1.322.225.00 | 75 uH | | STUDER |
| | MP....1 | 1.725.250.11 | | Phono Unit PCB | |
| | MP....2 | 1.726.780.01 | | Holder | |
| | MP....3 | 28.21.1450 | | Tubular Rivet | |
| | P.....1 | 54.01.0269 | 5-POLE | CIS Pin-Strip | |
| | Q.....1 | 50.03.0497 | BC 550 | NPN | |
| | Q....100 | 50.03.0516 | BC 337 | NPN matched | Sie |
| | Q....101 | 50.03.0516 | BC 337 | NPN matched | Sie |
| | Q....102 | 50.03.0516 | BC 337 | NPN matched | Sie |
| | Q....103 | 50.03.0516 | BC 337 | NPN matched | Sie |
| | Q....104 | 50.03.0625 | BC 327 | PNP matched | Sie |
| | Q....105 | 50.03.0625 | BC 327 | PNP matched | Sie |
| | Q....106 | 50.03.0625 | BC 327 | PNP matched | Sie |



| IND. | POS.NO. | PART NO. | VALUE | SPECIFICATIONS / EQUIVALENT | MANUF. |
|---|---|---|---|---|---|
| | Q....107 | 50.03.0625 | BC 327 | PNP matched | Sie |
| | Q....108 | 50.03.0215 | 2SK170 | FET | TO |
| | Q....109 | 50.03.0215 | 2SK170 | FET | TO |
| | Q....110 | 50.03.0497 | BC 550 | NPN | |
| | Q....111 | 50.03.0497 | BC 550 | NPN | |
| | Q....112 | 50.03.0497 | BC 550 | NPN | |
| | Q....113 | 50.03.0496 | BC 560 | PNP | |
| | Q....114 | 50.03.0496 | BC 560 | PNP | |
| | Q....115 | 50.03.0496 | BC 560 | PNP | |
| | Q....116 | 50.03.0496 | BC 560 | PNP | |
| | Q....117 | 50.03.0497 | BC 550 | NPN | |
| | Q....118 | 50.03.0496 | BC 560 | PNP | |
| | Q....119 | 50.03.0497 | BC 550 | NPN | |
| | Q....200 | 50.03.0515 | BC 337 | NPN matched | Sie |
| | Q....201 | 50.03.0516 | BC 337 | NPN matched | Sie |
| | Q....202 | 50.03.0516 | BC 337 | NPN matched | Sie |
| | Q....203 | 50.03.0516 | BC 337 | NPN matched | Sie |
| | Q....204 | 50.03.0625 | BC 327 | PNP matched | Sie |
| | Q....205 | 50.03.0625 | BC 327 | PNP matched | Sie |
| | Q....206 | 50.03.0625 | BC 327 | PNP matched | Sie |
| | Q....207 | 50.03.0625 | BC 327 | PNP matched | Sie |
| | Q....208 | 50.03.0215 | 2SK170 | FET | TO |
| | Q....209 | 50.03.0215 | 2SK170 | FET | TO |
| | Q....210 | 50.03.0497 | BC 550 | NPN | |
| | Q....211 | 50.03.0497 | BC 550 | NPN | |
| | Q....212 | 50.03.0497 | BC 550 | NPN | |
| | Q....213 | 50.03.0496 | BC 560 | PNP | |
| | Q....214 | 50.03.0496 | BC 560 | PNP | |
| | Q....215 | 50.03.0496 | BC 560 | PNP | |
| | Q....216 | 50.03.0496 | BC 560 | PNP | |
| | Q....217 | 50.03.0497 | BC 550 | NPN | |
| | Q....218 | 50.03.0496 | BC 560 | PNP | |
| | Q....219 | 50.03.0497 | BC 550 | NPN | |
| | R.....1 | 57.111.4103 | 10 KOhm | 2%, 0.25W, MF | |
| | R.....2 | 57.111.4103 | 10 KOhm | 2%, 0.25W, MF | |
| | R.....3 | 57.111.4103 | 10 KOhm | 2%, 0.25W, MF | |



| IND. | POS.NO. | PART NO. | VALUE | SPECIFICATIONS / EQUIVALENT | MANUF. |
|---|---|---|---|---|---|

(01) 13.08.87 Improvement for FTZ requirement

Left Channel: MM/MC=100....
Right Channel: MM/MC=200....
Both : 1....

EL=Electrolytic, CER=Ceramic, PETP=Polyester, PP=Polypropylen

MF=Metal Film

MANUFACTURER: ITT=Intermetall, EX=Exar, NEC=Nippon Electric
NSC=National Semiconductors, RA=Raytheon
RCA=Radio Corporation, SIG=Signetics
TI=Texas Instruments, TO=Toshiba

ORIG 87/05/07 (01) 87/08/13

## PREAMPLIFIER PCB 1.725.260.00 B250 (--S)

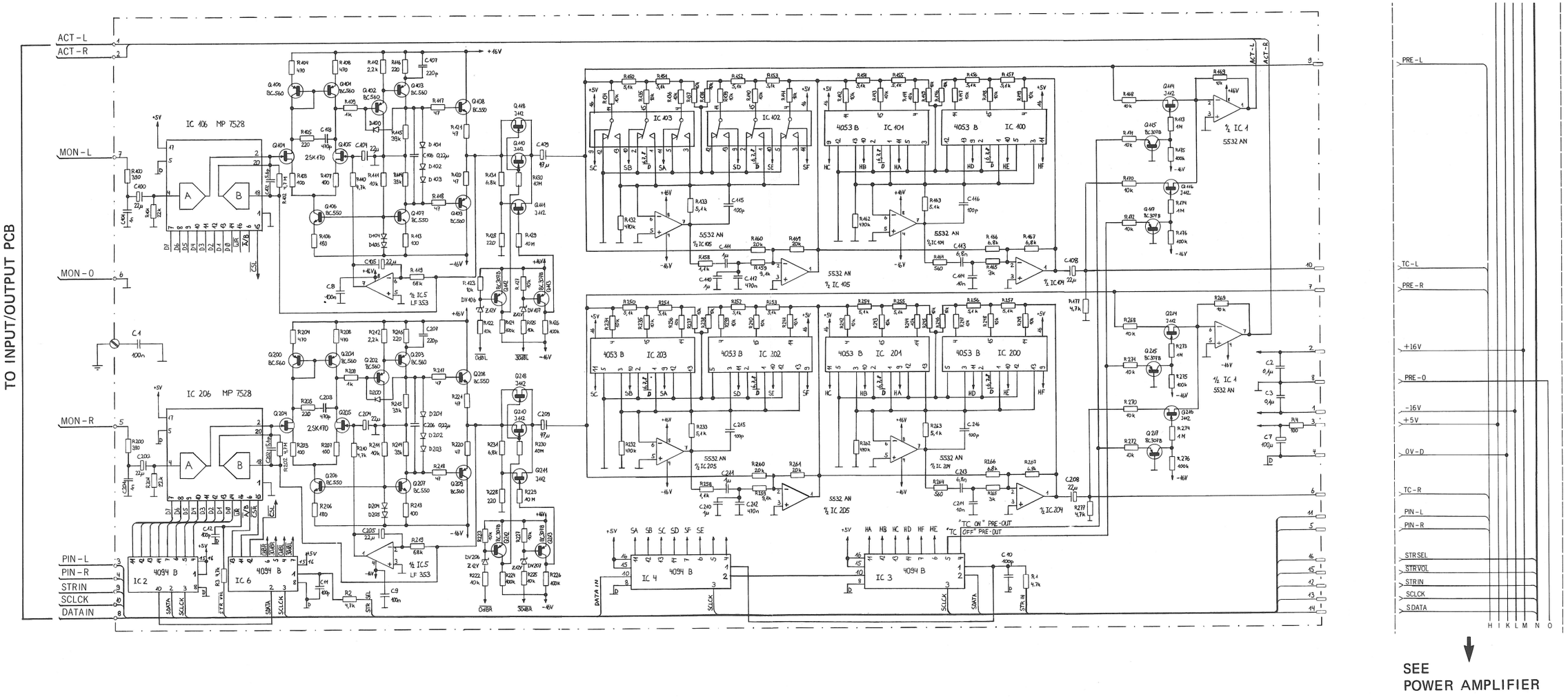


| | | | |
|---|---|---|---|
| 0 30.6.86 Hartwig | 1 19.05.87 SP | 2 26.06.87 Hz | 3 14.08.87 SP |
| | AMPLIFIER B250 | | PAGE 1 OF 3 |
| STUDER | PREAMPLIFIER | SC | 1.725.260.00 |

## PREAMPLIFIER PCB 1.725.260.00 B250 (--S)

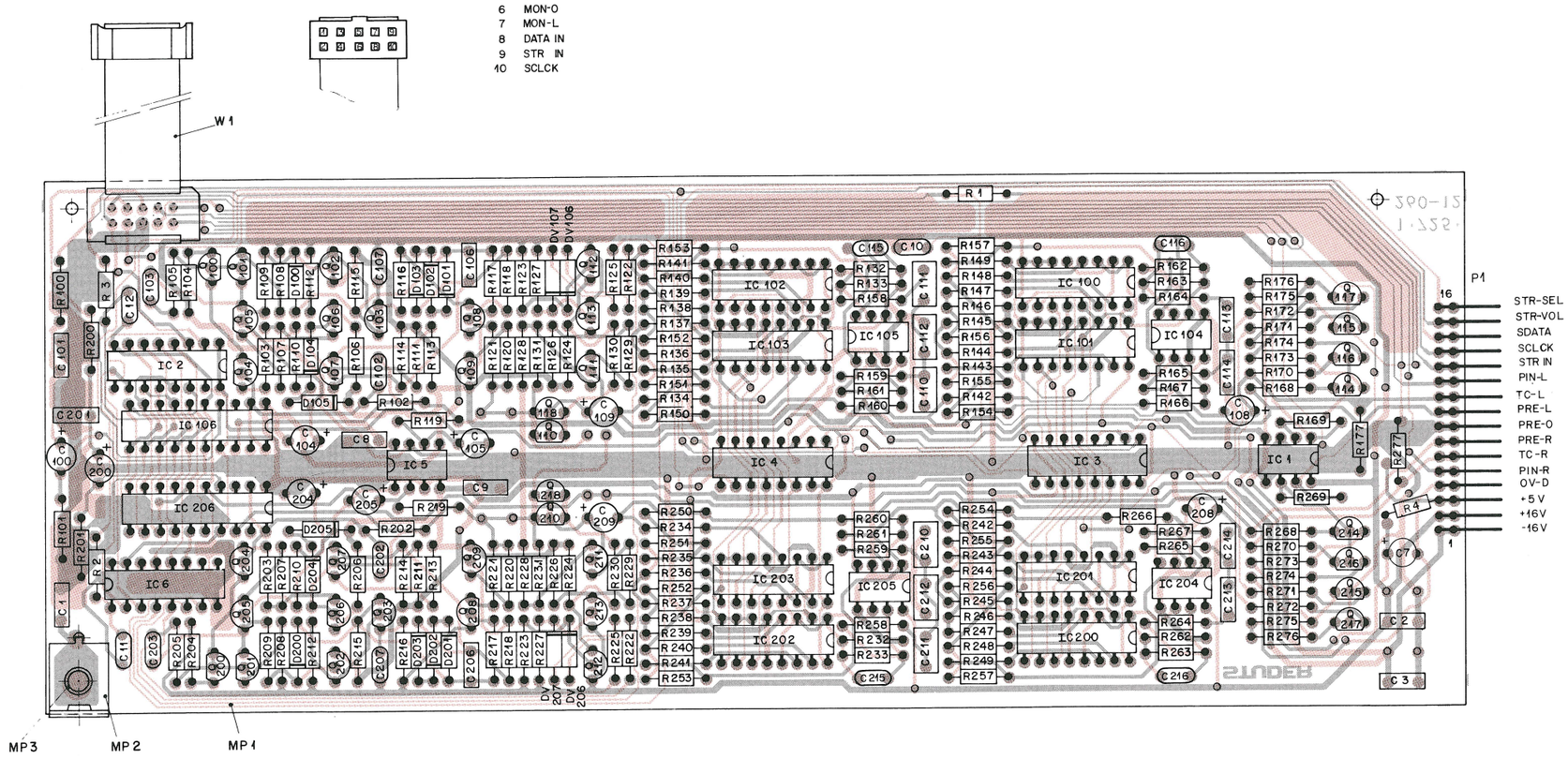


| IND. | POS.NO. | PART NO. | VALUE | SPECIFICATIONS / EQUIVALENT | MANUF. |
|---|---|---|---|---|---|
| | Q...117 | 50.03.0515 | BC 307B | PNP | ITT |
| | Q...118 | 50.03.0350 | J 112 | FET | Mot |
| | Q...200 | 50.03.0496 | BC 560 | PNP | Sie |
| | Q...201 | 50.03.0496 | BC 560 | PNP | Sie |
| | Q...202 | 50.03.0496 | BC 560 | PNP | Sie |
| | Q...203 | 50.03.0496 | BC 560 | PNP | Sie |
| | Q...204 | 50.03.0215 | SK 170 | FET | TO |
| | Q...205 | 50.03.0215 | SK 170 | FET | TO |
| | Q...206 | 50.03.0497 | BC 550 | NPN | Sie |
| | Q...207 | 50.03.0497 | BC 550 | NPN | Sie |
| | Q...208 | 50.03.0497 | BC 550 | NPN | Sie |
| | Q...209 | 50.03.0496 | BC 560 | PNP | Sie |
| | Q...210 | 50.03.0350 | J 112 | FET | Mot |
| | Q...211 | 50.03.0350 | J 112 | FET | Mot |
| | Q...212 | 50.03.0515 | BC 307B | PNP | ITT |
| | Q...213 | 50.03.0515 | BC 307B | PNP | ITT |
| | Q...214 | 50.03.0350 | J 112 | FET | Mot |
| | Q...215 | 50.03.0515 | BC 307B | PNP | ITT |
| | Q...216 | 50.03.0350 | J 112 | FET | Mot |
| | Q...217 | 50.03.0515 | BC 307B | PNP | ITT |
| | Q...218 | 50.03.0350 | J 112 | FET | Mot |
| | R.....1 | 57.11.4472 | 4.7 KOhm | 2%, 0.25W, MF | |
| | R.....2 | 57.11.4472 | 4.7 KOhm | 2%, 0.25W, MF | |
| | R.....3 | 57.11.4472 | 4.7 KOhm | 2%, 0.25W, MF | |
| | R.....4 | 57.11.4101 | 100 Ohm | 2%, 0.25W, MF | |
| | R...100 | 57.11.4391 | 390 Ohm | 2%, 0.25W, MF | |
| | R...101 | 57.11.4223 | 22 KOhm | 2%, 0.25W, MF | |
| | R...102 | 57.11.5475 | 4.7 MOhm | 5%, 0.25W, CF | |
| | R...103 | 57.11.4101 | 100 Ohm | 2%, 0.25W, MF | |
| | R...104 | 57.11.4471 | 470 Ohm | 2%, 0.25W, MF | |
| | R...105 | 57.11.4221 | 220 Ohm | 2%, 0.25W, MF | |
| | R...106 | 57.11.4181 | 180 Ohm | 2%, 0.25W, MF | |
| | R...107 | 57.11.4101 | 100 Ohm | 2%, 0.25W, MF | |
| | R...108 | 57.11.4471 | 470 Ohm | 2%, 0.25W, MF | |
| | R...109 | 57.11.4102 | 1 KOhm | 2%, 0.25W, MF | |
| | R...110 | 57.11.4472 | 4.7 KOhm | 2%, 0.25W, MF | |



| IND. | POS.NO. | PART NO. | VALUE | SPECIFICATIONS / EQUIVALENT | MANUF. |
|---|---|---|---|---|---|
| | R...111 | 57.11.4103 | 10 KOhm | 2%, 0.25W, MF | |
| | R...112 | 57.11.4222 | 2.2 KOhm | 2%, 0.25W, MF | |
| | R...113 | 57.11.4101 | 100 Ohm | 2%, 0.25W, MF | |
| | R...114 | 57.11.4393 | 39 KOhm | 2%, 0.25W, MF | |
| | R...115 | 57.11.4393 | 39 KOhm | 2%, 0.25W, MF | |
| | R...116 | 57.11.4221 | 220 Ohm | 2%, 0.25W, MF | |
| | R...117 | 57.11.4470 | 47 Ohm | 2%, 0.25W, MF | |
| | R...118 | 57.11.4473 | 47 Ohm | 2%, 0.25W, MF | |
| (00) | R...119 | 57.11.4104 | 100 KOhm | 2%, 0.25W, MF | |
| (02) | R...119 | 57.11.4683 | 68 KOhm | 2%, 0.25W, MF | |
| | R...120 | 57.11.4470 | 47 Ohm | 2%, 0.25W, MF | |
| | R...121 | 57.11.4470 | 47 Ohm | 2%, 0.25W, MF | |
| | R...122 | 57.11.4103 | 10 KOhm | 2%, 0.25W, MF | |
| | R...123 | 57.11.4103 | 10 KOhm | 2%, 0.25W, MF | |
| | R...124 | 57.11.4104 | 100 KOhm | 2%, 0.25W, MF | |
| | R...125 | 57.11.4103 | 10 KOhm | 2%, 0.25W, MF | |
| | R...126 | 57.11.4104 | 100 KOhm | 2%, 0.25W, MF | |
| | R...127 | 57.11.4103 | 10 KOhm | 2%, 0.25W, MF | |
| | R...128 | 57.11.4221 | 220 Ohm | 2%, 0.25W, MF | |
| | R...129 | 57.11.5106 | 10 MOhm | 5%, 0.25W, CF | |
| | R...130 | 57.11.5106 | 10 MOhm | 5%, 0.25W, CF | |
| | R...131 | 57.11.4682 | 6.8 KOhm | 2%, 0.25W, MF | |
| | R...132 | 57.11.4474 | 470 KOhm | 2%, 0.25W, MF | |
| | R...133 | 57.11.3512 | 5.1 KOhm | 2%, 0.25W, MF | |
| | R...134 | 57.11.4103 | 10 KOhm | 2%, 0.25W, MF | |
| | R...135 | 57.11.4103 | 10 KOhm | 2%, 0.25W, MF | |
| | R...136 | 57.11.4103 | 10 KOhm | 2%, 0.25W, MF | |
| | R...137 | 57.11.4103 | 10 KOhm | 2%, 0.25W, MF | |
| | R...138 | 57.11.4103 | 10 KOhm | 2%, 0.25W, MF | |
| | R...139 | 57.11.4103 | 10 KOhm | 2%, 0.25W, MF | |
| | R...140 | 57.11.4103 | 10 KOhm | 2%, 0.25W, MF | |
| | R...141 | 57.11.4103 | 10 KOhm | 2%, 0.25W, MF | |
| | R...142 | 57.11.4103 | 10 KOhm | 2%, 0.25W, MF | |
| | R...143 | 57.11.4103 | 10 KOhm | 2%, 0.25W, MF | |
| | R...144 | 57.11.4103 | 10 KOhm | 2%, 0.25W, MF | |
| | R...145 | 57.11.4103 | 10 KOhm | 2%, 0.25W, MF | |
| | R...146 | 57.11.4103 | 10 KOhm | 2%, 0.25W, MF | |



| IND. | POS.NO. | PART NO. | VALUE | SPECIFICATIONS / EQUIVALENT | MANUF. |
|---|---|---|---|---|---|
| | C.....1 | 59.06.0104 | 0.1 uF | 10%, 25V, PETP | |
| | C.....2 | 59.06.0104 | 0.1 uF | 10%, 25V, PETP | |
| | C.....3 | 59.06.0104 | 0.1 uF | 10%, 25V, PETP | |
| | C.....7 | 59.22.3101 | 100 uF | -20%, 10V, EL | |
| | C.....8 | 59.06.0104 | 0.1 uF | 10%, 25V, PETP | |
| | C.....9 | 59.06.0104 | 0.1 uF | 10%, 25V, PETP | |
| | C....10 | 59.34.4101 | 100 pF | 10%, 25V, Cer | |
| | C....11 | 59.34.4101 | 100 pF | 10%, 25V, Cer | |
| | C....12 | 59.34.4101 | 100 pF | 10%, 25V, Cer | |
| | C...100 | 59.22.5220 | 22 uF | -20%, 10V, EL | |
| | C...101 | 59.06.0102 | 1 nF | 10%, 25V, PETP | |
| | C...102 | 59.34.0569 | 5.6 pF | 10%, 25V, Cer | |
| | C...103 | 59.34.5471 | 470 pF | 10%, 25V, Cer | |
| | C...104 | 59.22.5220 | 22 uF | -20%, 25V, EL | |
| | C...105 | 59.22.5220 | 22 uF | -20%, 25V, EL | |
| | C...106 | 59.06.0224 | 220 nF | 10%, 25V, PETP | |
| | C...107 | 59.34.4221 | 220 pF | 10%, 25V, Cer | |
| | C...108 | 59.22.5220 | 22 uF | -20%, 10V, EL | |
| (00) | C...109 | 59.22.5220 | 22 uF | -20%, 10V, EL | |
| (01) | C...109 | 59.22.3101 | 100 uF | -20%, 10V, EL | |
| (02) | C...109 | 59.22.3470 | 47 uF | -20%, 10V, EL | |
| | C...110 | 59.06.5105 | 1 uF | 5%, 25V, PETP | |
| | C...111 | 59.06.5105 | 1 uF | 5%, 25V, PETP | |
| | C...112 | 59.06.5474 | 470 nF | 5%, 25V, PETP | |
| | C...113 | 59.06.5682 | 6.8 nF | 5%, 25V, PETP | |
| | C...114 | 59.06.5103 | 10 nF | 5%, 25V, PETP | |
| (02) | C...115 | 59.34.4101 | 100 pF | 10%, 25V, Cer | |
| (02) | C...116 | 59.34.4101 | 100 pF | 10%, 25V, Cer | |
| | C...200 | 59.22.5220 | 22 uF | -20%, 10V, EL | |
| | C...201 | 59.06.0102 | 1 nF | 10%, 25V, PETP | |
| | C...202 | 59.34.0569 | 5.6 pF | 10%, 25V, Cer | |
| | C...203 | 59.34.5471 | 470 pF | 10%, 25V, Cer | |
| | C...204 | 59.22.5220 | 22 uF | -20%, 25V, EL | |
| | C...205 | 59.22.5220 | 22 uF | -20%, 25V, EL | |
| | C...206 | 59.06.0224 | 220 nF | 10%, 25V, PETP | |
| | C...207 | 59.34.4221 | 220 pF | 10%, 25V, Cer | |
| | C...208 | 59.22.5220 | 22 uF | -20%, 10V, EL | |



| IND. | POS.NO. | PART NO. | VALUE | SPECIFICATIONS / EQUIVALENT | MANUF. |
|---|---|---|---|---|---|
| (00) | C...209 | 59.22.5220 | 22 uF | -20%, 10V, EL | |
| (01) | C...209 | 59.22.3101 | 100 uF | -20%, 10V, EL | |
| (02) | C...209 | 59.22.3470 | 47 uF | -20%, 10V, EL | |
| | C...210 | 59.06.5105 | 1 uF | 5%, 25V, PETP | |
| | C...211 | 59.06.5105 | 1 uF | 5%, 25V, PETP | |
| | C...212 | 59.06.5474 | 470 nF | 5%, 25V, PETP | |
| | C...213 | 59.06.5682 | 6.8 nF | 5%, 25V, PETP | |
| | C...214 | 59.06.5103 | 10 nF | 5%, 25V, PETP | |
| (02) | C...215 | 59.34.4101 | 100 pF | 10%, 25V, Cer | |
| (02) | C...216 | 59.34.4101 | 100 pF | 10%, 25V, Cer | |
| | D...100 | 50.04.0125 | 1N 4448 | | |
| | D...101 | 50.04.0125 | 1N 4448 | | |
| | D...102 | 50.04.0125 | 1N 4448 | | |
| | D...103 | 50.04.0125 | 1N 4448 | | |
| | D...104 | 50.04.0125 | 1N 4448 | | |
| | D...105 | 50.04.0125 | 1N 4448 | | |
| | D...200 | 50.04.0125 | 1N 4448 | | |
| | D...201 | 50.04.0125 | 1N 4448 | | |
| | D...202 | 50.04.0125 | 1N 4448 | | |
| | D...203 | 50.04.0125 | 1N 4448 | | |
| | D...204 | 50.04.0125 | 1N 4448 | | |
| | D...205 | 50.04.0125 | 1N 4448 | | |
| | DV...106 | 50.04.1117 | Z 12 V | 5%, 0.4 W | |
| | DV...107 | 50.04.1117 | Z 12 V | 5%, 0.4 W | |
| | DV...206 | 50.04.1117 | Z 12 V | 5%, 0.4 W | |
| | DV...207 | 50.04.1117 | Z 12 V | 5%, 0.4 W | |
| | IC....1 | 50.09.0106 | NE 5532AN | OP-AMP Dual ,Low Noise | Sig |
| | IC....2 | 50.07.0018 | MC 14094B | HEF 40948 | Mot,Ph |
| | IC....3 | 50.07.0018 | MC 14094B | HEF 40948 | Mot,Ph |
| | IC....4 | 50.07.0018 | MC 14094B | HEF 40948 | Mot,Ph |
| | IC....5 | 50.09.0101 | TL 072ACP | LF 353 | TI+NS |
| | IC...106 | 50.07.0018 | MC 14094B | HEF 40948 | Mot,Ph |
| | IC...100 | 50.07.0015 | MC 14053B | HEF 40538 | Mot,Ph |
| | IC...101 | 50.07.0015 | MC 14053B | HEF 40538 | Mot,Ph |



| IND. | POS.NO. | PART NO. | VALUE | SPECIFICATIONS / EQUIVALENT | MANUF. |
|---|---|---|---|---|---|
| | IC...102 | 50.07.0015 | MC 14053B | HEF 40538 | Mot,Ph |
| | IC...103 | 50.07.0015 | MC 14053B | HEF 40538 | Mot,Ph |
| | IC...104 | 50.09.0106 | NE 5532AN | OP-AMP Dual ,Low Noise | Sig |
| | IC...105 | 50.09.0106 | NE 5532AN | OP-AMP Dual ,Low Noise | Sig |
| | IC...106 | 50.07.0037 | AD 7528JN | | AOI |
| | IC...200 | 50.07.0015 | MC 14053B | HEF 40538 | Mot,Ph |
| | IC...201 | 50.07.0015 | MC 14053B | HEF 40538 | Mot,Ph |
| | IC...202 | 50.07.0015 | MC 14053B | HEF 40538 | Mot,Ph |
| | IC...203 | 50.07.0015 | MC 14053B | HEF 40538 | Mot,Ph |
| | IC...204 | 50.09.0106 | NE 5532AN | OP-AMP Dual ,Low Noise | Sig |
| | IC...205 | 50.09.0106 | NE 5532AN | OP-AMP Dual ,Low Noise | Sig |
| | IC...206 | 50.07.0037 | AD 7528JN | | AOI |
| (00) | MP....1 | 1.725.260.11 | | PreamplifierPCB | |
| (03) | MP....1 | 1.725.260.12 | | PreamplifierPCB | |
| | MP....2 | 1.726.780.01 | | Holder | |
| | MP....3 | 28.21.1450 | | Tubular Rivet | |
| | P.....1 | 54.31.0276 | 16-POLE | Plug Assembly CIS | |
| | Q...100 | 50.03.0496 | BC 560 | PNP | Sie |
| | Q...101 | 50.03.0496 | BC 560 | PNP | Sie |
| | Q...102 | 50.03.0496 | BC 560 | PNP | Sie |
| | Q...103 | 50.03.0496 | BC 560 | PNP | Sie |
| | Q...104 | 50.03.0215 | SK 170 | FET | TO |
| | Q...105 | 50.03.0215 | SK 170 | FET | TO |
| | Q...106 | 50.03.0497 | BC 550 | NPN | Sie |
| | Q...107 | 50.03.0497 | BC 550 | NPN | Sie |
| | Q...108 | 50.03.0497 | BC 550 | NPN | Sie |
| | Q...109 | 50.03.0496 | BC 560 | PNP | Sie |
| | Q...110 | 50.03.0350 | J 112 | FET | Mot |
| | Q...111 | 50.03.0350 | J 112 | FET | Mot |
| | Q...112 | 50.03.0515 | BC 307B | PNP | ITT |
| | Q...113 | 50.03.0515 | BC 307B | PNP | ITT |
| | Q...114 | 50.03.0350 | J 112 | FET | Mot |
| | Q...115 | 50.03.0515 | BC 307B | PNP | ITT |
| | Q...116 | 50.03.0350 | J 112 | FET | Mot |



| IND. | POS.NO. | PART NO. | VALUE | SPECIFICATIONS / EQUIVALENT | MANUF. |
|---|---|---|---|---|---|
| | R...147 | 57.11.4103 | 10 KOhm | 2%, 0.25W, MF | |
| | R...148 | 57.11.4103 | 10 KOhm | 2%, 0.25W, MF | |
| | R...149 | 57.11.4103 | 10 KOhm | 2%, 0.25W, MF | |
| | R...150 | 57.11.3512 | 5.1 KOhm | 2%, 0.25W, MF | |
| | R...151 | 57.11.3512 | 5.1 KOhm | 2%, 0.25W, MF | |
| | R...152 | 57.11.3512 | 5.1 KOhm | 2%, 0.25W, MF | |
| | R...153 | 57.11.3512 | 5.1 KOhm | 2%, 0.25W, MF | |
| | R...154 | 57.11.3512 | 5.1 KOhm | 2%, 0.25W, MF | |
| | R...155 | 57.11.3512 | 5.1 KOhm | 2%, 0.25W, MF | |
| | R...156 | 57.11.3512 | 5.1 KOhm | 2%, 0.25W, MF | |
| | R...157 | 57.11.3512 | 5.1 KOhm | 2%, 0.25W, MF | |
| | R...158 | 57.11.3112 | 1.1 KOhm | 2%, 0.25W, MF | |
| | R...159 | 57.11.3912 | 9.1 KOhm | 2%, 0.25W, MF | |
| | R...160 | 57.11.3203 | 20 KOhm | 2%, 0.25W, MF | |
| | R...161 | 57.11.3203 | 20 KOhm | 2%, 0.25W, MF | |
| | R...162 | 57.11.4474 | 470 KOhm | 2%, 0.25W, MF | |
| | R...163 | 57.11.3512 | 5.1 KOhm | 2%, 0.25W, MF | |
| | R...164 | 57.11.4561 | 560 Ohm | 2%, 0.25W, MF | |
| | R...165 | 57.11.3302 | 3 KOhm | 2%, 0.25W, MF | |
| | R...166 | 57.11.4682 | 6.8 KOhm | 2%, 0.25W, MF | |
| | R...167 | 57.11.4682 | 6.8 KOhm | 2%, 0.25W, MF | |
| | R...168 | 57.11.4103 | 10 KOhm | 2%, 0.25W, MF | |
| | R...169 | 57.11.4103 | 10 KOhm | 2%, 0.25W, MF | |
| | R...170 | 57.11.4103 | 10 KOhm | 2%, 0.25W, MF | |
| | R...171 | 57.11.4103 | 10 KOhm | 2%, 0.25W, MF | |
| | R...172 | 57.11.4103 | 10 KOhm | 2%, 0.25W, MF | |
| | R...173 | 57.11.4105 | 1 MOhm | 2%, 0.25W, MF | |
| | R...174 | 57.11.4105 | 1 MOhm | 2%, 0.25W, MF | |
| | R...175 | 57.11.4104 | 100 KOhm | 2%, 0.25W, MF | |
| | R...176 | 57.11.4104 | 100 KOhm | 2%, 0.25W, MF | |
| | R...177 | 57.11.4472 | 4.7 KOhm | 2%, 0.25W, MF | |
| | R...200 | 57.11.4391 | 390 Ohm | 2%, 0.25W, MF | |
| | R...201 | 57.11.3223 | 22 KOhm | 2%, 0.25W, MF | |
| | R...202 | 57.11.5475 | 4.7 MOhm | 5%, 0.25W, CF | |
| | R...203 | 57.11.4101 | 100 Ohm | 2%, 0.25W, MF | |
| | R...204 | 57.11.4471 | 470 Ohm | 2%, 0.25W, MF | |
| | R...205 | 57.11.4221 | 220 Ohm | 2%, 0.25W, MF | |

# PREAMPLIFIER PCB 1.725.260.00 B250 (–S)

| IND. | POS.NO. | PART NO. | VALUE | SPECIFICATIONS / EQUIVALENT | MANUF. |
|---|---|---|---|---|---|
| | R...206 | 57.11.4181 | 180 Ohm | 2%, 0.25W, MF | |
| | R...207 | 57.11.4101 | 100 Ohm | 2%, 0.25W, MF | |
| | R...208 | 57.11.4471 | 470 Ohm | 2%, 0.25W, MF | |
| | R...209 | 57.11.4102 | 1 KOhm | 2%, 0.25W, MF | |
| | R...210 | 57.11.4472 | 4.7 KOhm | 2%, 0.25W, MF | |
| | R...211 | 57.11.4103 | 10 KOhm | 2%, 0.25W, MF | |
| | R...212 | 57.11.4222 | 2.2 KOhm | 2%, 0.25W, MF | |
| | R...213 | 57.11.4101 | 100 Ohm | 2%, 0.25W, MF | |
| | R...214 | 57.11.4393 | 39 KOhm | 2%, 0.25W, MF | |
| | R...215 | 57.11.4393 | 39 KOhm | 2%, 0.25W, MF | |
| | R...216 | 57.11.4221 | 220 Ohm | 2%, 0.25W, MF | |
| | R...217 | 57.11.4470 | 47 Ohm | 2%, 0.25W, MF | |
| | R...218 | 57.11.4470 | 47 Ohm | 2%, 0.25W, MF | |
| (00) | R...219 | 57.11.4104 | 100 KOhm | 2%, 0.25W, MF | |
| (02) | R...219 | 57.11.4683 | 68 KOhm | 2%, 0.25W, MF | |
| | R...220 | 57.11.4470 | 47 Ohm | 2%, 0.25W, MF | |
| | R...221 | 57.11.4470 | 47 Ohm | 2%, 0.25W, MF | |
| | R...222 | 57.11.4103 | 10 KOhm | 2%, 0.25W, MF | |
| | R...223 | 57.11.4103 | 10 KOhm | 2%, 0.25W, MF | |
| | R...224 | 57.11.4104 | 100 KOhm | 2%, 0.25W, MF | |
| | R...225 | 57.11.4103 | 10 KOhm | 2%, 0.25W, MF | |
| | R...226 | 57.11.4104 | 100 KOhm | 2%, 0.25W, MF | |
| | R...227 | 57.11.4103 | 10 KOhm | 2%, 0.25W, MF | |
| | R...228 | 57.11.4221 | 220 Ohm | 2%, 0.25W, MF | |
| | R...229 | 57.11.5106 | 10 MOhm | 5%, 0.25W, CF | |
| | R...230 | 57.11.5106 | 10 MOhm | 5%, 0.25W, CF | |
| | R...231 | 57.11.4682 | 6.8 KOhm | 2%, 0.25W, MF | |
| | R...232 | 57.11.4474 | 470 KOhm | 2%, 0.25W, MF | |
| | R...233 | 57.11.3512 | 5.1 KOhm | 2%, 0.25W, MF | |
| | R...234 | 57.11.4103 | 10 KOhm | 2%, 0.25W, MF | |
| | R...235 | 57.11.4103 | 10 KOhm | 2%, 0.25W, MF | |
| | R...236 | 57.11.4103 | 10 KOhm | 2%, 0.25W, MF | |
| | R...237 | 57.11.4103 | 10 KOhm | 2%, 0.25W, MF | |
| | R...238 | 57.11.4103 | 10 KOhm | 2%, 0.25W, MF | |
| | R...239 | 57.11.4103 | 10 KOhm | 2%, 0.25W, MF | |
| | R...240 | 57.11.4103 | 10 KOhm | 2%, 0.25W, MF | |
| | R...241 | 57.11.4103 | 10 KOhm | 2%, 0.25W, MF | |



| IND. | POS.NO. | PART NO. | VALUE | SPECIFICATIONS / EQUIVALENT | MANUF. |
|---|---|---|---|---|---|
| | R...242 | 57.11.4103 | 10 KOhm | 2%, 0.25W, MF | |
| | R...243 | 57.11.4103 | 10 KOhm | 2%, 0.25W, MF | |
| | R...244 | 57.11.4103 | 10 KOhm | 2%, 0.25W, MF | |
| | R...245 | 57.11.4103 | 10 KOhm | 2%, 0.25W, MF | |
| | R...246 | 57.11.4103 | 10 KOhm | 2%, 0.25W, MF | |
| | R...247 | 57.11.4103 | 10 KOhm | 2%, 0.25W, MF | |
| | R...248 | 57.11.4103 | 10 KOhm | 2%, 0.25W, MF | |
| | R...249 | 57.11.4103 | 10 KOhm | 2%, 0.25W, MF | |
| | R...250 | 57.11.3512 | 5.1 KOhm | 2%, 0.25W, MF | |
| | R...251 | 57.11.3512 | 5.1 KOhm | 2%, 0.25W, MF | |
| | R...252 | 57.11.3512 | 5.1 KOhm | 2%, 0.25W, MF | |
| | R...253 | 57.11.3512 | 5.1 KOhm | 2%, 0.25W, MF | |
| | R...254 | 57.11.3512 | 5.1 KOhm | 2%, 0.25W, MF | |
| | R...255 | 57.11.3512 | 5.1 KOhm | 2%, 0.25W, MF | |
| | R...256 | 57.11.3512 | 5.1 KOhm | 2%, 0.25W, MF | |
| | R...257 | 57.11.3512 | 5.1 KOhm | 2%, 0.25W, MF | |
| | R...258 | 57.11.3112 | 1.1 KOhm | 2%, 0.25W, MF | |
| | R...259 | 57.11.3912 | 9.1 KOhm | 2%, 0.25W, MF | |
| | R...260 | 57.11.3203 | 20 KOhm | 2%, 0.25W, MF | |
| | R...261 | 57.11.3203 | 20 KOhm | 2%, 0.25W, MF | |
| | R...262 | 57.11.4474 | 470 KOhm | 2%, 0.25W, MF | |
| | R...263 | 57.11.3512 | 5.1 KOhm | 2%, 0.25W, MF | |
| | R...264 | 57.11.4561 | 560 Ohm | 2%, 0.25W, MF | |
| | R...265 | 57.11.3302 | 3 KOhm | 2%, 0.25W, MF | |
| | R...266 | 57.11.4682 | 6.8 KOhm | 2%, 0.25W, MF | |
| | R...267 | 57.11.4682 | 6.8 KOhm | 2%, 0.25W, MF | |
| | R...268 | 57.11.4103 | 10 KOhm | 2%, 0.25W, MF | |
| | R...269 | 57.11.4103 | 10 KOhm | 2%, 0.25W, MF | |
| | R...270 | 57.11.4103 | 10 KOhm | 2%, 0.25W, MF | |
| | R...271 | 57.11.4103 | 10 KOhm | 2%, 0.25W, MF | |
| | R...272 | 57.11.4103 | 10 KOhm | 2%, 0.25W, MF | |
| | R...273 | 57.11.4105 | 1 MOhm | 2%, 0.25W, MF | |
| | R...274 | 57.11.4105 | 1 MOhm | 2%, 0.25W, MF | |
| | R...275 | 57.11.4104 | 100 KOhm | 2%, 0.25W, MF | |
| | R...276 | 57.11.4104 | 100 KOhm | 2%, 0.25W, MF | |
| | R...277 | 57.11.4472 | 4.7 KOhm | 2%, 0.25W, MF | |



| IND. | POS.NO. | PART NO. | VALUE | SPECIFICATIONS / EQUIVALENT | MANUF. |
|---|---|---|---|---|---|
| | W.....1 | 1.023.110.06 | 10-POLE | Flat Cable | |

(01) Correction of POSLIST
(02) Quality improvement
(03) Quality improvement

Both Channels: 1.....
Left Channel: 100.....
Right Channel: 200.....

EL=Electrolytic, Cer=Ceramic, PETP=Polyester
MF=Metal Film, CF=Carbon Film

MANUFACTURER: ADI=Analog Devices, NS=NationalSemiconductors
Ph=Philips, Mot=Motorola, TI=Texas Instruments, TO=Toshiba

ORIG 87/05/19 (01) 87/06/26 (02) 87/08/14 (03) 88/02/29

## POWER AMPLIFIER PCB 1.725.270.00 B250 (–S)

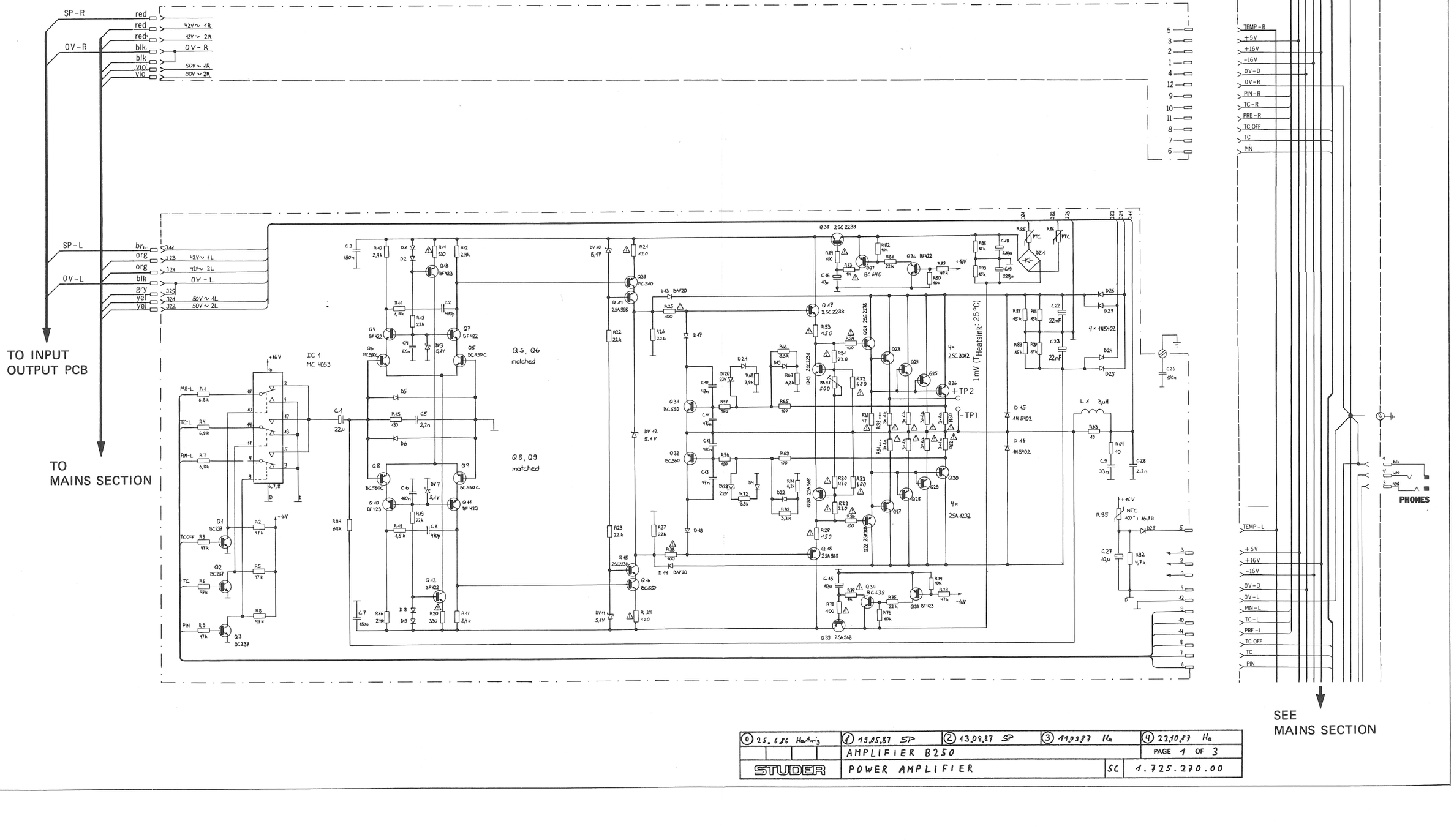


| | | | |
|---|---|---|---|
| ⓪ 25.6.86 Hartwig | ① 19.05.87 SP | ② 13.09.87 SP | ③ 19.03.87 He | ④ 22.10.87 He |
| | AMPLIFIER B250 | | PAGE 1 OF 3 |
| STUDER | POWER AMPLIFIER | SC | 1.725.270.00 |

## POWER AMPLIFIER PCB 1.725.270.00 B250 (–S)

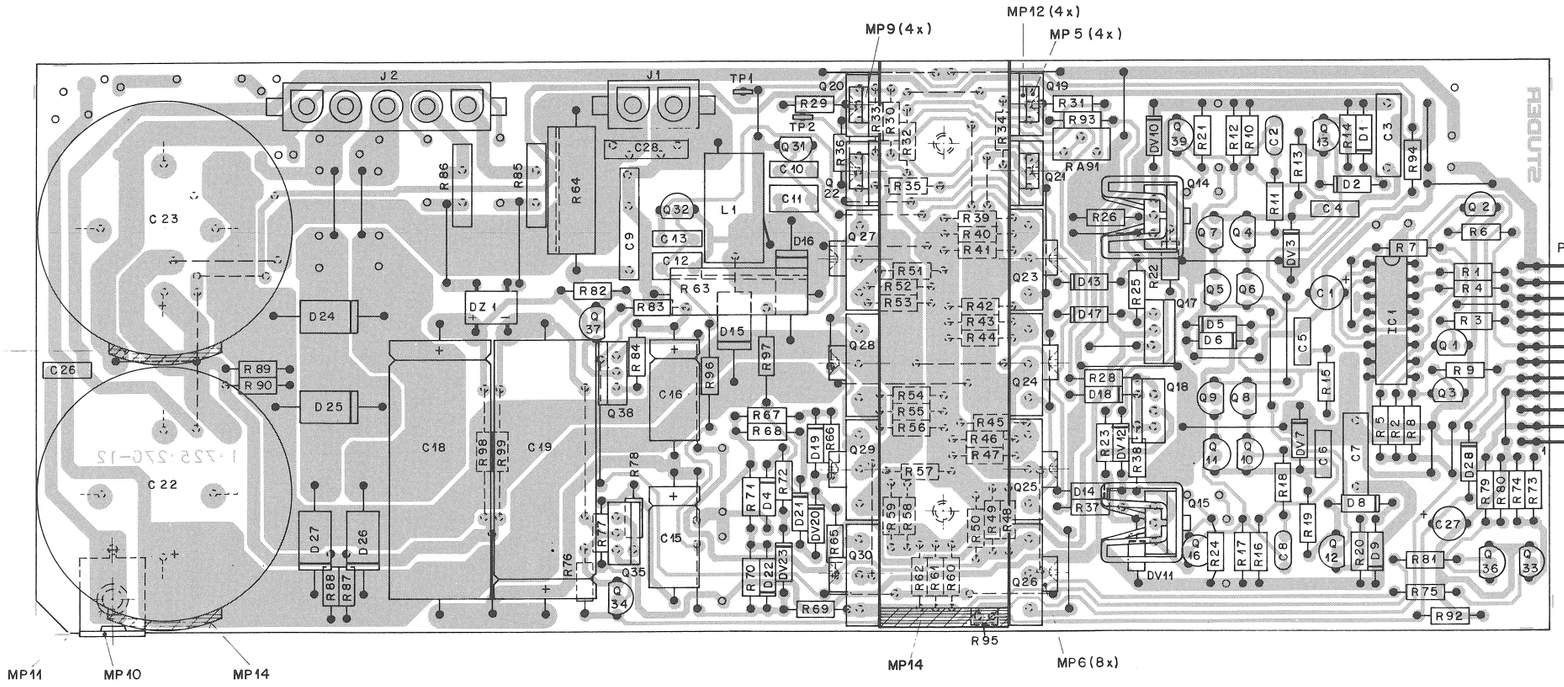


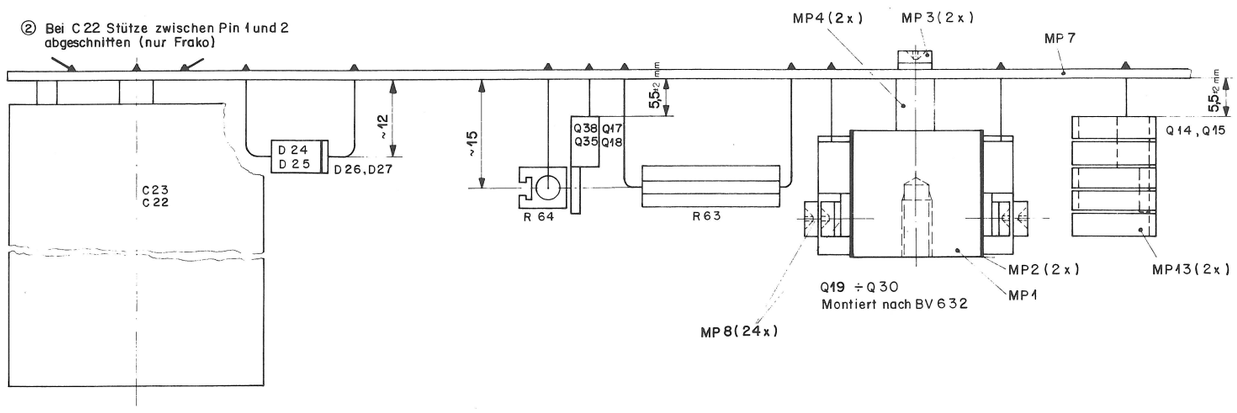


Warnschild - ESE und Nr. Etikette nach Fabr. Muster aufgeklebt.

| IND. | POS.NO. | PART NO. | VALUE | SPECIFICATIONS / EQUIVALENT | MANUF. |
|---|---|---|---|---|---|
| (00) | C...001 | 59.22.3101 | 100 uF | -10% + 10V + EL | |
| (02) | C...001 | 59.22.5220 | 22 uF | -10% + 10V + EL | |
| | C...002 | 59.34.5471 | 470 pF | 5% + 63V + CER | |
| | C...003 | 59.02.2154 | 150 nF | 10% + 100V + PETP/PME | |
| | C...004 | 59.06.0104 | 100 nF | 10% + 63V + PETP | |
| | C...005 | 59.06.9222 | 2.2 nF | 5% + 63V + PETP | |
| | C...006 | 59.06.0104 | 100 nF | 10% + 63V + PETP | |
| | C...007 | 59.02.2154 | 150 nF | 10% + 100V + PETP/PME | |
| | C...008 | 59.34.5471 | 470 pF | 5% + 63V + CER | |
| | C...009 | 59.35.6333 | 33 nF | 10% + 400V + PP | |
| | C...010 | 59.06.0473 | 47 nF | 10% + 63V + PETP | |
| | C...011 | 59.06.0474 | 470 nF | 10% + 63V + PETP | |
| | C...012 | 59.06.0474 | 470 nF | 10% + 63V + PETP | |
| | C...013 | 59.06.0473 | 47 nF | 10% + 63V + PETP | |
| | C...015 | 59.25.7100 | 10 uF | -10% + 100V + EL | |
| | C...016 | 59.25.7100 | 10 uF | -10% + 100V + EL | |
| | C...018 | 59.25.7221 | 220 uF | -10% + 100V + EL | |
| | C...019 | 59.25.7221 | 220 uF | -10% + 100V + EL | |
| | C...022 | 59.35.6223 | 22 mF | -20% + 63V + EL | |
| | C...023 | 59.35.6223 | 22 mF | -20% + 63V + EL | |
| | C...026 | 59.06.0104 | 100 nF | 10% + 63V + PETP | |
| | C...027 | 59.22.6100 | 10 uF | -10% + 35V + EL | |
| (00) | C...028 | 59.05.2222 | 2.2 nF | 10% + 160V + PP | |
| (01) | C...028 | 59.05.6222 | 2.2 nF | 10% + 160V + PP | |
| | D...001 | 50.04.0125 | 1N4448 | | any |
| | D...002 | 50.04.0125 | 1N4448 | | any |
| | D...004 | 50.04.0133 | BAV 20 | Ur=120V | Ph |
| | D...005 | 50.04.3125 | 1N4448 | | any |
| | D...006 | 50.04.0125 | 1N4448 | | any |
| | D...008 | 50.04.0125 | 1N4448 | | any |
| | D...009 | 50.04.0125 | 1N4448 | | any |
| | D...013 | 50.04.0133 | BAV 20 | Ur=120V | Ph |
| | D...014 | 50.04.0133 | BAV 20 | Ur=120V | Ph |
| | D...015 | 50.04.0507 | 1N5402 | 200 V, 3 A+/ MR 502 | Mot |
| | D...016 | 50.04.0507 | 1N5402 | 200 V, 3 A+/ MR 502 | Mot |
| | D...017 | 50.04.0125 | 1N4448 | | any |

STUDER (05) 88/02/29 SP POWER AMPLIFIER "ESE" PL 1.725.270.00 PAGE 1

| IND. | POS.NO. | PART NO. | VALUE | SPECIFICATIONS / EQUIVALENT | MANUF. |
|---|---|---|---|---|---|
| | D...018 | 50.04.0125 | 1N4448 | | any |
| | D...019 | 50.04.0133 | BAV 20 | Ur=120V | Ph |
| | D...021 | 50.04.0133 | BAV 20 | Ur=120V | Ph |
| | D...022 | 50.04.0133 | BAV 20 | Ur=120V | Ph |
| | D...024 | 50.04.0507 | 1N5402 | 200 V, 3 A+/ MR 502 | Mot |
| | D...025 | 50.04.0507 | 1N5402 | 200 V, 3 A+/ MR 502 | Mot |
| | D...026 | 50.04.0507 | 1N5402 | 200 V, 3 A+/ MR 502 | Mot |
| | D...027 | 50.04.0507 | 1N5402 | 200 V, 3 A+/ MR 502 | Mot |
| | D...028 | 50.04.0125 | 1N4448 | | any |
| | DV..003 | 50.04.1112 | 5,1 V | Z, 400 mW | any |
| | DV..007 | 50.04.1112 | 5,1 V | Z, 400 mW | any |
| | DV..010 | 50.04.1112 | 5,1 V | Z, 400 mW | any |
| | DV..011 | 50.04.1112 | 5,1 V | Z, 400 mW | any |
| | DV..012 | 50.04.1112 | 5,1 V | Z, 400 mW | any |
| | DV..020 | 50.04.1116 | 22 V | Z, 400 mW | any |
| | DV..023 | 50.04.1116 | 22 V | Z, 400 mW | any |
| | DZ...001 | 70.01.0217 | DF 04M | 400 V, 1 A | |
| | IC...001 | 50.07.0015 | MC14053 | Triple 2Chn. Analog Mpx. | Mot |
| | J...001 | 54.25.0002 | 2 pole | Power Connector | |
| | J...002 | 54.25.0005 | 5 pole | Power Connector | |
| | L...001 | 1.728.320.25 | 3.0uH | Output Coil | St |
| | MP..001 | 1.725.270.01 | 1 pcs | Cooling Block | |
| | MP..002 | 1.725.270.02 | 2 pcs | Thermoplastic Foil | |
| | MP..003 | Z1.38.1372 | 2 pcs | Screw M3Ø16 Rustless | |
| | MP..004 | 1.010.503.27 | 2 pcs | Distance Holder | |
| (00) | MP..005 | Z1.26.0355 | 4 pcs | Screw M3Ø8 | |
| (02) | MP..005 | Z1.26.0357 | 4 pcs | Screw M3Ø12 | |
| | MP..006 | Z1.26.0357 | 8 pcs | Screw M3Ø12 | |
| (00) | MP..007 | 1.725.270.11 | 1 pcs | Power Amp.PCB | |
| (05) | MP..007 | 1.725.270.12 | 1 pcs | Power Amp.PCB | |
| | MP..008 | 37.01.0101 | 24 pcs | Spring Washer | |

STUDER (05) 88/02/29 SP POWER AMPLIFIER "ESE" PL 1.725.270.00 PAGE 2

| IND. | POS.NO. | PART NO. | VALUE | SPECIFICATIONS / EQUIVALENT | MANUF. |
|---|---|---|---|---|---|
| | MP..009 | 1.010.098.27 | 4 pcs | Washer | |
| | MP..010 | 1.726.780.01 | 1 pcs | Holder | |
| | MP..011 | 28.21.1450 | 1 pcs | Tubular Rivet | |
| | MP..012 | 50.20.0404 | 4 pcs | Insulating Bush | |
| | MP..013 | 50.20.3004 | 2 pcs | Heatsink | |
| | MP..014 | 1.725.270.03 | 3 pcs | foam rubber | |
| | P...001 | 54.31.0221 | 12 pole | CIS | |
| | Q...001 | 50.03.0436 | BC 237B | NPN | Sie |
| | Q...002 | 50.03.0436 | BC 237B | NPN | Sie |
| | Q...003 | 50.03.0436 | BC 237B | NPN | Sie |
| | Q...004 | 50.03.0553 | BF 422 | NPN Vceo>160V | Ph |
| | Q...005 | 1.010.039.50 | BC 550C | NPN Matched with Q6 | St |
| | Q...006 | 1.010.039.50 | BC 550C | NPN Matched with Q5 | St |
| | Q...007 | 50.03.0553 | BF 422 | NPN Vceo>160V | Ph |
| | Q...008 | 1.010.038.50 | BC 560C | PNP Matched with Q9 | St |
| | Q...009 | 1.010.038.50 | BC 560C | PNP Matched with Q8 | St |
| | Q...010 | 50.03.0627 | BF 423 | PNP Vceo>160V | Ph |
| | Q...011 | 50.03.0627 | BF 423 | PNP Vceo>160V | Ph |
| | Q...012 | 50.03.0553 | BF 422 | NPN Vceo>160V | Ph |
| | Q...013 | 50.03.0627 | BF 423 | PNP Vceo>160V | Ph |
| | Q...014 | 50.03.0801 | 2SA968 | PNP Vceo>160V,B>70 | To |
| | Q...015 | 50.03.0776 | 2SC2238 | NPN Vceo>160V,B>70 | To |
| | Q...016 | 50.03.0497 | BC 550 | NPN | Sie |
| | Q...017 | 50.03.0776 | 2SC2238 | NPN Vceo>160V,B>70 | To |
| | Q...018 | 50.03.0801 | 2SA968 | PNP Vceo>160V,B>70 | To |
| | Q...019 | 50.03.0776 | 2SC2238 | NPN Vceo>160V,B>70 | To |
| | Q...020 | 50.03.0801 | 2SA968 | PNP Vceo>160V,B>70 | To |
| | Q...021 | 50.03.0776 | 2SC2238 | NPN Vceo>120V,B>70 | To |
| | Q...022 | 50.03.0801 | 2SA968 | PNP Vceo>120V,B>70 | To |
| | Q...023 | 50.03.0517 | 2SC3012 | NPN | NEC |
| | Q...024 | 50.03.0517 | 2SC3012 | NPN | NEC |
| | Q...025 | 50.03.0517 | 2SC3012 | NPN | NEC |
| | Q...026 | 50.03.0517 | 2SC3012 | NPN | NEC |
| | Q...027 | 50.03.0518 | 2SA1232 | PNP | NEC |
| | Q...028 | 50.03.0518 | 2SA1232 | PNP | NEC |

STUDER (05) 88/02/29 SP POWER AMPLIFIER "ESE" PL 1.725.270.00 PAGE 3

# POWER AMPLIFIER PCB 1.725.270.00 B250 (–S)

| IND. | POS.NO. | PART NO. | VALUE | SPECIFICATIONS / EQUIVALENT | MANUF. |
|---|---|---|---|---|---|
| | Q...029 | 50.03.0518 | 2SA1232 | PNP | NEC |
| | Q...030 | 50.03.0518 | 2SA1232 | PNP | NEC |
| | Q...031 | 50.03.0497 | BC 550 | NPN | Sie |
| | Q...032 | 50.03.0496 | BC 560 | PNP | Sie |
| | Q...033 | 50.03.0627 | BF 423 | PNP Vceo>120V | Ph |
| (00) | Q...034 | 50.03.0553 | BF 422 | NPN Vceo>120V | Ph |
| (04) | Q...034 | 50.03.0551 | BC 639 | NPN Vceo>80V | Ph |
| | Q...035 | 50.03.0801 | 2SA968 | PNP Vceo>120V,B>70 | To |
| | Q...036 | 50.03.0553 | BF 422 | PNP Vceo>120V | Ph |
| (00) | Q...037 | 50.03.0627 | BF 423 | PNP Vceo>120V | Ph |
| (04) | Q...037 | 50.03.0626 | BC 640 | PNP Vceo>80V | Ph |
| | Q...038 | 50.03.0776 | 2SC2238 | NPN Vceo>120V,B>70 | To |
| | Q...039 | 50.03.0496 | BC 560 | PNP | Sie |
| | R...001 | 57.11.4682 | 6.8 kOhm | 2% , 0.25W , MF | |
| | R...002 | 57.11.4473 | 47 kOhm | 2% , 0.25W , MF | |
| | R...003 | 57.11.4473 | 47 kOhm | 2% , 0.25W , MF | |
| | R...004 | 57.11.4682 | 6.8 kOhm | 2% , 0.25W , MF | |
| | R...005 | 57.11.4473 | 47 kOhm | 2% , 0.25W , MF | |
| | R...006 | 57.11.4473 | 47 kOhm | 2% , 0.25W , MF | |
| | R...007 | 57.11.4682 | 6.8 kOhm | 2% , 0.25W , MF | |
| | R...008 | 57.11.4473 | 47 kOhm | 2% , 0.25W , MF | |
| | R...009 | 57.11.4473 | 47 kOhm | 2% , 0.25W , MF | |
| | R...010 | 57.11.3242 | 2.4 kOhm | 2% , 0.25W , MF | |
| | R...011 | 57.11.4152 | 1.5 kOhm | 2% , 0.25W , MF | |
| | R...012 | 57.11.3242 | 2.4 kOhm | 2% , 0.25W , MF | |
| | R...013 | 57.11.4223 | 22 kOhm | 2% , 0.25W , MF | |
| | R...014 | 57.19.0331 | 330 Ohm | 5% , 0.25W , MF | FUSIBLE RESISTOR |
| | R...015 | 57.11.3131 | 130 Ohm | 2% , 0.25W , MF | |
| | R...016 | 57.11.3242 | 2.4 kOhm | 2% , 0.25W , MF | |
| | R...017 | 57.11.3242 | 2.4 kOhm | 2% , 0.25W , MF | |
| | R...018 | 57.11.4152 | 1.5 kOhm | 2% , 0.25W , MF | |
| | R...019 | 57.11.4223 | 22 kOhm | 2% , 0.25W , MF | |
| | R...020 | 57.19.0331 | 330 Ohm | 5% , 0.25W , MF | FUSIBLE RESISTOR |
| (00) | R...021 | 57.19.0101 | 100 Ohm | 5% , 0.25W , MF | FUSIBLE RESISTOR |
| (03) | R...021 | 57.19.0121 | 120 Ohm | 5% , 0.25W , MF | FUSIBLE RESISTOR |
| | R...022 | 57.11.4223 | 22 kOhm | 2% , 0.25W , MF | |



| IND. | POS.NO. | PART NO. | VALUE | SPECIFICATIONS / EQUIVALENT | MANUF. |
|---|---|---|---|---|---|
| | R...023 | 57.11.4223 | 22 kOhm | 2% , 0.25W , MF | |
| (00) | R...024 | 57.19.0101 | 100 Ohm | 5% , 0.25W , MF | FUSIBLE RESISTOR |
| (03) | R...024 | 57.19.0121 | 120 Ohm | 5% , 0.25W , MF | FUSIBLE RESISTOR |
| | R...025 | 57.19.0101 | 100 Ohm | 5% , 0.25W , MF | FUSIBLE RESISTOR |
| | R...026 | 57.11.4223 | 22 kOhm | 2% , 0.25W , MF | |
| (00) | R...028 | 57.19.0820 | 82 Ohm | 5% , 0.25W , MF | FUSIBLE RESISTOR |
| (03) | R...028 | 57.19.0151 | 150 Ohm | 5% , 0.25W , MF | FUSIBLE RESISTOR |
| (00) | R...029 | 57.11.4471 | 470 Ohm | 2% , 0.25W , MF | |
| (04) | R...029 | 57.19.0221 | 220 Ohm | 5% , 0.25W , MF | FUSIBLE RESISTOR |
| (00) | R...030 | 57.11.4102 | 1 kOhm | 2% , 0.25W , MF | |
| (04) | R...030 | 57.19.0471 | 470 Ohm | 5% , 0.25W , MF | FUSIBLE RESISTOR |
| (00) | R...031 | 57.11.4471 | 470 Ohm | 2% , 0.25W , MF | |
| (04) | R...031 | 57.19.0221 | 220 Ohm | 5% , 0.25W , MF | FUSIBLE RESISTOR |
| (00) | R...032 | 57.11.4152 | 1.5 kOhm | 2% , 0.25W , MF | |
| (04) | R...032 | 57.19.0681 | 680 Ohm | 5% , 0.25W , MF | FUSIBLE RESISTOR |
| (00) | R...033 | 57.11.4152 | 1.5 kOhm | 2% , 0.25W , MF | |
| (04) | R...033 | 57.19.0681 | 680 Ohm | 5% , 0.25W , MF | FUSIBLE RESISTOR |
| | R...034 | 57.19.0101 | 100 Ohm | 5% , 0.25W , MF | FUSIBLE RESISTOR |
| | R...035 | 57.19.0470 | 47 Ohm | 5% , 0.25W , MF | FUSIBLE RESISTOR |
| | R...036 | 57.19.0101 | 100 Ohm | 5% , 0.25W , MF | FUSIBLE RESISTOR |
| | R...037 | 57.11.4223 | 22 kOhm | 2% , 0.25W , MF | |
| | R...038 | 57.19.0101 | 100 Ohm | 5% , 0.25W , MF | FUSIBLE RESISTOR |
| | R...039 | 57.19.0109 | 1 Ohm | 5% , 0.25W , MF | FUSIBLE RESISTOR |
| | R...040 | 57.19.0109 | 1 Ohm | 5% , 0.25W , MF | FUSIBLE RESISTOR |
| | R...041 | 57.19.0109 | 1 Ohm | 5% , 0.25W , MF | FUSIBLE RESISTOR |
| | R...042 | 57.19.0109 | 1 Ohm | 5% , 0.25W , MF | FUSIBLE RESISTOR |
| | R...043 | 57.19.0109 | 1 Ohm | 5% , 0.25W , MF | FUSIBLE RESISTOR |
| | R...044 | 57.19.0109 | 1 Ohm | 5% , 0.25W , MF | FUSIBLE RESISTOR |
| | R...045 | 57.19.0109 | 1 Ohm | 5% , 0.25W , MF | FUSIBLE RESISTOR |
| | R...046 | 57.19.0109 | 1 Ohm | 5% , 0.25W , MF | FUSIBLE RESISTOR |
| | R...047 | 57.19.0109 | 1 Ohm | 5% , 0.25W , MF | FUSIBLE RESISTOR |
| | R...048 | 57.19.0109 | 1 Ohm | 5% , 0.25W , MF | FUSIBLE RESISTOR |
| | R...049 | 57.19.0109 | 1 Ohm | 5% , 0.25W , MF | FUSIBLE RESISTOR |
| | R...050 | 57.19.0109 | 1 Ohm | 5% , 0.25W , MF | FUSIBLE RESISTOR |
| | R...051 | 57.19.0109 | 1 Ohm | 5% , 0.25W , MF | FUSIBLE RESISTOR |
| | R...052 | 57.19.0109 | 1 Ohm | 5% , 0.25W , MF | FUSIBLE RESISTOR |
| | R...053 | 57.19.0109 | 1 Ohm | 5% , 0.25W , MF | FUSIBLE RESISTOR |



| IND. | POS.NO. | PART NO. | VALUE | SPECIFICATIONS / EQUIVALENT | MANUF. |
|---|---|---|---|---|---|
| | R...054 | 57.19.0109 | 1 Ohm | 5% , 0.25W , MF | FUSIBLE RESISTOR |
| | R...055 | 57.19.0109 | 1 Ohm | 5% , 0.25W , MF | FUSIBLE RESISTOR |
| | R...056 | 57.19.0109 | 1 Ohm | 5% , 0.25W , MF | FUSIBLE RESISTOR |
| | R...057 | 57.19.0109 | 1 Ohm | 5% , 0.25W , MF | FUSIBLE RESISTOR |
| | R...058 | 57.19.0109 | 1 Ohm | 5% , 0.25W , MF | FUSIBLE RESISTOR |
| | R...059 | 57.19.0109 | 1 Ohm | 5% , 0.25W , MF | FUSIBLE RESISTOR |
| | R...060 | 57.19.0109 | 1 Ohm | 5% , 0.25W , MF | FUSIBLE RESISTOR |
| | R...061 | 57.19.0109 | 1 Ohm | 5% , 0.25W , MF | FUSIBLE RESISTOR |
| | R...062 | 57.19.0109 | 1 Ohm | 5% , 0.25W , MF | FUSIBLE RESISTOR |
| | R...063 | 57.56.5100 | 10 Ohm | 10% , 4 W , | |
| | R...064 | 57.56.5100 | 10 Ohm | 10% , 4 W , | |
| | R...065 | 57.19.0101 | 100 Ohm | 5% , 0.25W , MF | FUSIBLE RESISTOR |
| | R...066 | 57.11.4332 | 3.3 kOhm | 2% , 0.25W , MF | |
| | R...067 | 57.11.4622 | 6.2 kOhm | 2% , 0.25W , MF | |
| | R...068 | 57.11.4392 | 3.9 kOhm | 2% , 0.25W , MF | |
| | R...069 | 57.19.0101 | 100 Ohm | 5% , 0.25W , MF | FUSIBLE RESISTOR |
| | R...070 | 57.11.4332 | 3.3 kOhm | 2% , 0.25W , MF | |
| | R...071 | 57.11.4622 | 6.2 kOhm | 2% , 0.25W , MF | |
| | R...072 | 57.11.4392 | 3.9 kOhm | 2% , 0.25W , MF | |
| | R...073 | 57.11.4473 | 47 kOhm | 2% , 0.25W , MF | |
| | R...074 | 57.11.4103 | 10 kOhm | 2% , 0.25W , MF | |
| | R...075 | 57.11.4223 | 22 kOhm | 2% , 0.25W , MF | |
| | R...076 | 57.11.4103 | 10 kOhm | 2% , 0.25W , MF | |
| | R...077 | 57.19.0102 | 1 kOhm | 5% , 0.25W , MF | FUSIBLE RESISTOR |
| | R...078 | 57.19.0101 | 100 Ohm | 5% , 0.25W , MF | FUSIBLE RESISTOR |
| | R...079 | 57.11.4473 | 47 kOhm | 2% , 0.25W , MF | |
| | R...080 | 57.11.4103 | 10 kOhm | 2% , 0.25W , MF | |
| | R...081 | 57.11.4223 | 22 kOhm | 2% , 0.25W , MF | |
| | R...082 | 57.11.4103 | 10 kOhm | 2% , 0.25W , MF | |
| | R...083 | 57.19.0102 | 1 kOhm | 5% , 0.25W , MF | FUSIBLE RESISTOR |
| | R...084 | 57.19.0101 | 100 Ohm | 5% , 0.25W , MF | FUSIBLE RESISTOR |
| | R...085 | 57.92.2221 | 10 Ohm | 220mA, 256 V , PTC | |
| | R...086 | 57.92.2221 | 10 Ohm | 220mA, 256 V , PTC | |
| | R...087 | 57.11.4153 | 15 kOhm | 2% , 0.25W , MF | |
| | R...088 | 57.11.4153 | 15 kOhm | 2% , 0.25W , MF | |
| | R...089 | 57.11.4153 | 15 kOhm | 2% , 0.25W , MF | |
| | R...090 | 57.11.4153 | 15 kOhm | 2% , 0.25W , MF | |



| IND. | POS.NO. | PART NO. | VALUE | SPECIFICATIONS / EQUIVALENT | MANUF. |
|---|---|---|---|---|---|
| | R...092 | 57.11.4472 | 4.7 kOhm | 2% , 0.25W , MF | |
| (00) | R...093 | 57.19.0820 | 82 Ohm | 5% , 0.25W , MF | FUSIBLE RESISTOR |
| (03) | R...093 | 57.19.0151 | 150 Ohm | 5% , 0.25W , MF | FUSIBLE RESISTOR |
| | R...094 | 57.11.4683 | 68 kOhm | 2% , 0.25W , MF | |
| | R...095 | 57.99.0220 | 16.7kOhm | 100 C , NTC | |
| | R...096 | 57.11.4101 | 100 Ohm | 2% , 0.25W , MF | |
| | R...097 | 57.11.4101 | 100 Ohm | 2% , 0.25W , MF | |
| | R...098 | 57.11.4153 | 15 kOhm | 2% , 0.25W , MF | |
| | R...099 | 57.11.4153 | 15 kOhm | 2% , 0.25W , MF | |
| (00) | RA..091 | 58.01.9101 | 1 kOhm | 10% , 0.5 W , Cerm | |
| (01) | RA..091 | 58.01.9102 | 1 kOhm | 10% , 0.5 W , Cerm | |
| (04) | RA..091 | 58.01.9501 | 500 Ohm | 10% , 0.5 W , Cerm | |
| | TP..001 | 29.21.6002 | | | |
| | TP..002 | 29.21.6002 | | | |

(01) Correction of POSLIST
(02) Quality improvement
(03) Reduction of biascurrent for Q14, Q15, Q17, Q18
(04) Improvement for operation under fault conditions (IEC 65)
(05) Quality improvement

Mf=Metalfilm
Cer=Ceramic
Petp=Polyester
El=Electrolytic
PP=Polypropylene
MANUFACTURER: Sie=Siemens , St=Studer , To=Toshiba
Mot=Motorola, Ph=Philips,

ORIG 87/05/19 (01) 87/07/01 (02) 87/08/13 (03) 87/09/11 (04) 87/10/22
(05) 88/02/29

## INTERCONNECTION PCB 1.725.280.00 B250 (–S)

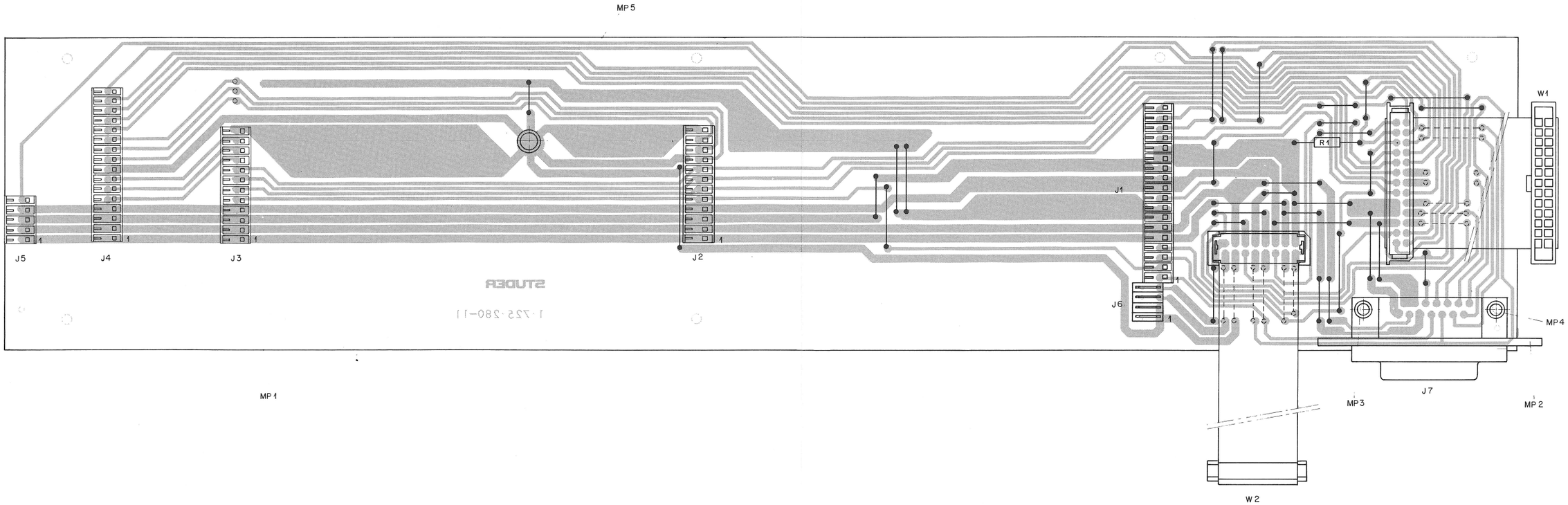


| IND. | POS.NO. | PART NO. | VALUE | SPECIFICATIONS / EQUIVALENT | MANUF. |
|---|---|---|---|---|---|
| | J.....1 | 54.01.0296 | 18-POLE | CIS SOCKET-STRIP | |
| | J.....2 | 54.01.0215 | 12-POLE | CIS SOCKET-STRIP | |
| | J.....3 | 54.01.0215 | 12-POLE | CIS SOCKET-STRIP | |
| | J.....4 | 54.01.0294 | 16-POLE | CIS SOCKET-STRIP | |
| | J.....5 | 54.31.0288 | 5-POLE | CIS SOCKET-STRIP | |
| | J.....6 | 54.01.0298 | 4-POLE | CIS SOCKET-STRIP | |
| | J.....7 | 54.13.0002 | 15-POLE | Connector D-Type Female | |
| | MP....1 | 1.725.280.11 | | INTERCONNECTION PCB | |
| | MP....2 | 1.725.280.01 | | Holder For D-Type Connector | |
| | MP....3 | 28.21.2409 | | Tubular Rivet | |
| | MP....4 | 28.21.2409 | | Tubular Rivet | |
| | MP....5 | 28.21.2505 | | Tubular Rivet | |
| | R.....1 | 57.11.4103 | 10 KOhm | 2%, 0.25W, MF | |
| | W.....1 | 1.023.312.02 | 26-POLE | Flat Cable | |
| | W.....2 | 1.023.311.04 | 16-POLE | Flat Cable | |

ORIG 87/04/27

S T U D E R (00) 87/04/27 SP INTERCONNECTION BOARD PL 1.725.280.00 PAGE 1

## INTERCONNECTION PCB 1.725.280.00 B250 (–S)

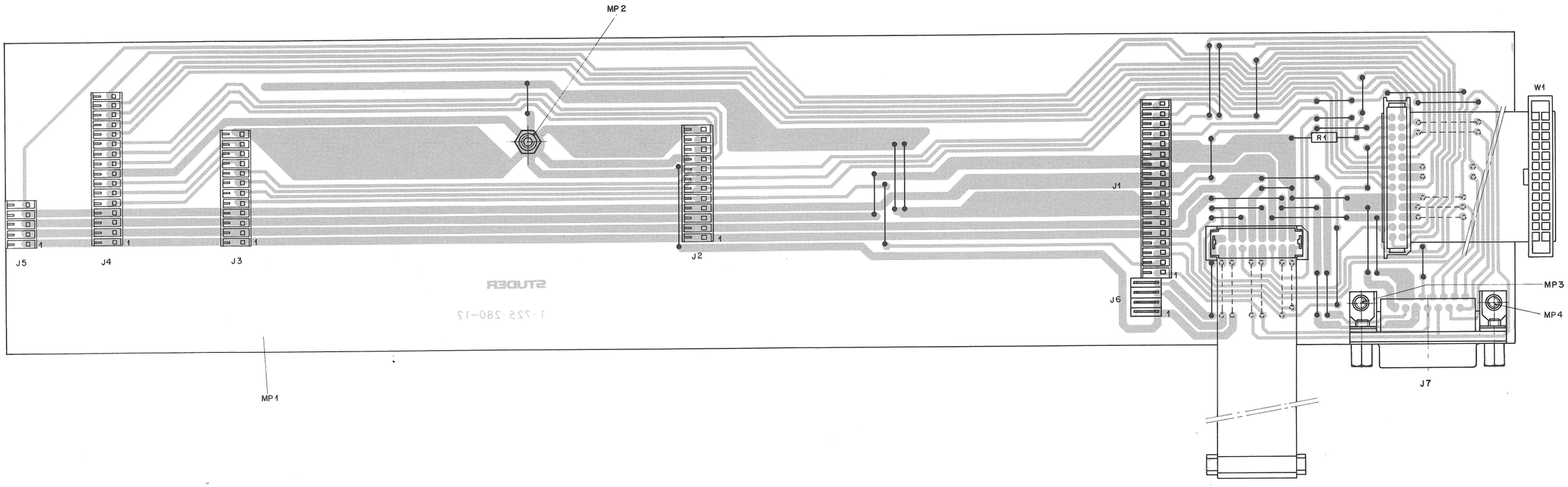


| IND. | POS.NO. | PART NO. | VALUE | SPECIFICATIONS / EQUIVALENT | MANUF. |
|---|---|---|---|---|---|
| | J.....1 | 54.01.0296 | 18-POLE | CIS SOCKET-STRIP | |
| | J.....2 | 54.01.0215 | 12-POLE | CIS SOCKET-STRIP | |
| | J.....3 | 54.01.0215 | 12-POLE | CIS SOCKET-STRIP | |
| | J.....4 | 54.01.0294 | 16-POLE | CIS SOCKET-STRIP | |
| | J.....5 | 54.01.0288 | 5-POLE | CIS SOCKET-STRIP | |
| | J.....6 | 54.01.0298 | 4-POLE | CIS SOCKET-STRIP | |
| | J.....7 | 54.99.0205 | 15-POLE | Connector D-Type Female | |
| | MP....1 | 1.725.280.12 | | INTERCONNECTION PCB | |
| | MP....2 | 1.010.013.22 | | Nut M3 | |
| | MP....3 | 21.38.0355 | | Screw M3 * 8 | |
| | MP....4 | 21.38.0355 | | Screw M3 * 8 | |
| | R.....1 | 57.11.4103 | 10 KOhm | 2%, 0.25W, MF | |
| | W.....1 | 1.023.312.02 | 26-POLE | Flat Cable | |
| | W.....2 | 1.023.311.04 | 16-POLE | Flat Cable | |

ORIG 88/02/29

S T U D E R (00) 88/02/29 SP INTERCONNECTION BOARD PL 1.725.280.81 PAGE 1

## MICROCOMPUTER PCB 1.725.290.82 B250 (–S)

SEE
MAINS SECTION

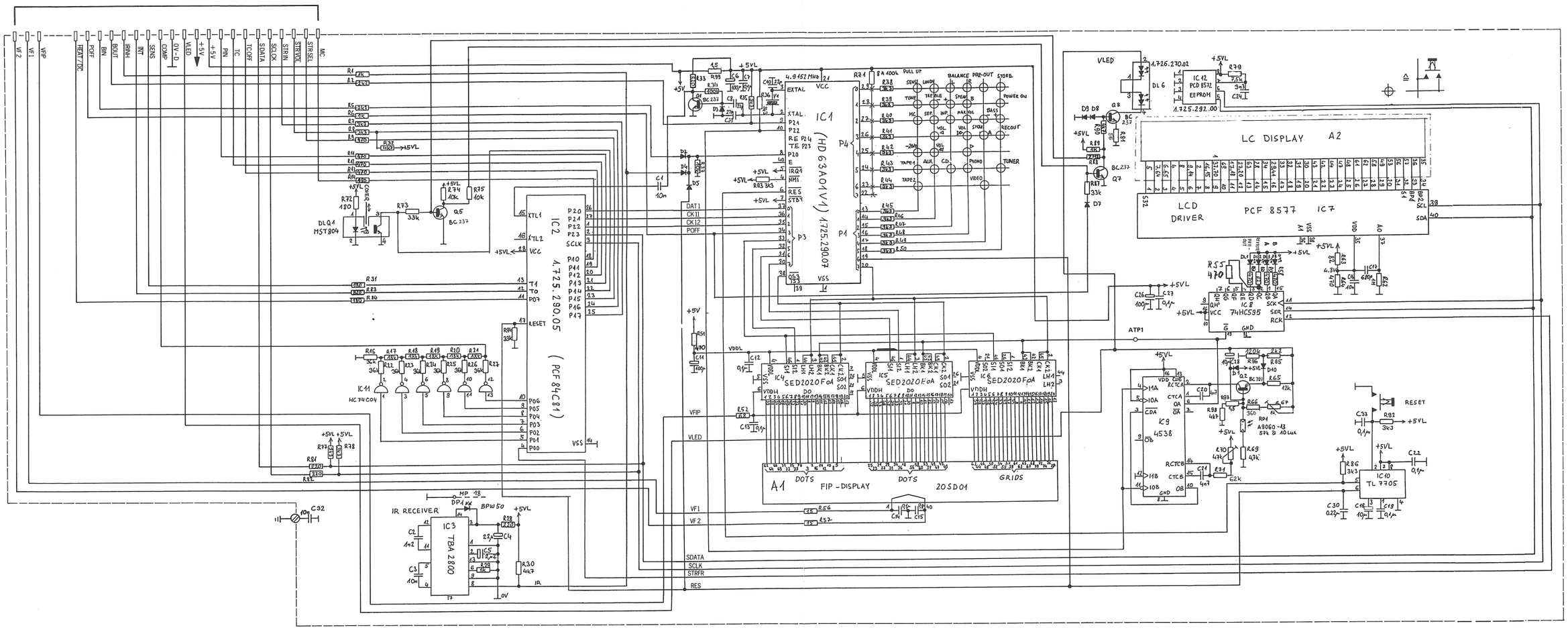


| | | | | |
|---|---|---|---|---|
| ⓪ 11.12.86 E.Stü. | ① 19.05.87 E.Stü. | ② 19.06.87. E.Stü. | ③ 30.11.87 E.Stü. | ○ . . |
| | | | | PAGE 2 OF 3 |
| STUDER | MICROCOMPUTER BOARD "ESE" | | SC | 1.725.290-00 |

## MICROCOMPUTER PCB 1.725.290.82 B250 (-S)

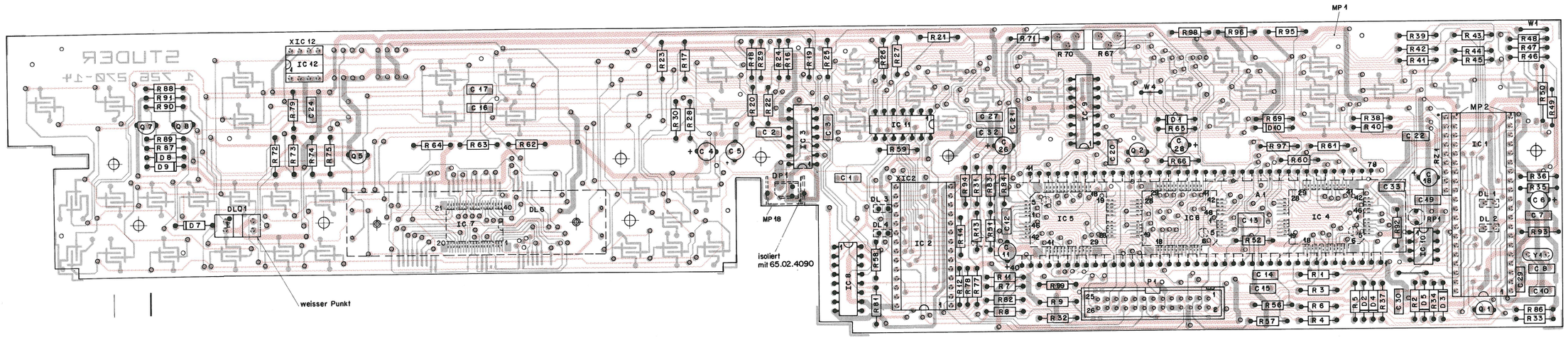


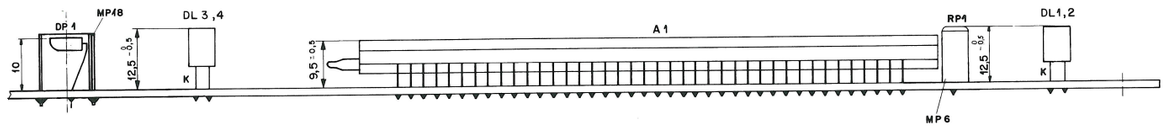


| IND. | POS.NO. | PART NO. | VALUE | SPECIFICATIONS / EQUIVALENT | MANUF. |
|---|---|---|---|---|---|
| | A.....1 | 73.01.0202 | FIP | 20SD01 20 Digit Display | NEC,FU |
| | C.....1 | 59.06.0103 | 10 nF | 10%, 63V, PETP | |
| | C.....2 | 59.32.2122 | 1.2 nF | 10%, 20V, CER | |
| | C.....3 | 59.06.0103 | 10 nF | 10%, 63V, PETP | |
| | C.....4 | 59.22.5220 | 22 uF | -20%, 25V, EL | |
| | C.....5 | 59.22.8229 | 2.2 uF | -20%, 25V, EL | |
| | C.....6 | 59.22.3101 | 100 uF | -20%, 10V, EL | |
| | C.....7 | 59.06.0104 | 100 nF | 10%, 63V, PETP | |
| | C.....8 | 59.34.2220 | 22 pF | 10%, 40V, CER | |
| | C.....10 | 59.34.2220 | 22 pF | 10%, 40V, CER | |
| | C.....11 | 59.22.3101 | 100 uF | -20%, 10V, EL | |
| | C.....12 | 59.06.0104 | 100 nF | 10%, 63V, PETP | |
| | C.....13 | 59.06.0104 | 100 nF | 10%, 63V, PETP | |
| | C.....14 | 59.06.0104 | 100 nF | 10%, 63V, PETP | |
| | C.....15 | 59.06.0104 | 100 nF | 10%, 63V, PETP | |
| | C.....16 | 59.06.0103 | 10 nF | 10%, 63V, PETP | |
| | C.....17 | 59.32.2681 | 680 pF | 10%, 40V, CER | |
| | C.....18 | 59.22.6100 | 10 uF | -20%, 10V, EL | |
| | C.....19 | 59.06.0104 | 100 nF | 10%, 63V, PETP | |
| | C.....20 | 59.06.0472 | 4.7 nF | 10%, 63V, PETP | |
| | C.....21 | 59.06.5472 | 4.7 nF | 5%, 63V, PETP | |
| | C.....22 | 59.06.0104 | 100 nF | 10%, 63V, PETP | |
| | C.....24 | 59.06.0332 | 3.3 nF | 10%, 63V, PETP | |
| | C.....26 | 59.22.3101 | 100 uF | -20%, 63V, EL | |
| | C.....27 | 59.06.0104 | 100 nF | 10%, 63V, PETP | |
| | C.....28 | 59.22.6100 | 10 uF | -20%, 25V, EL | |
| | C.....29 | 59.34.2220 | 22 pF | 10%, 40V, CER | |
| | C.....30 | 59.06.0224 | 220 nF | 10%, 63V, PETP | |
| | C.....32 | 59.06.0103 | 10 nF | 10%, 63V, PETP | |
| | C.....33 | 59.06.0104 | 100 nF | 10%, 63V, PETP | |
| | D.....1 | 50.04.0125 | 1N 4448 | | Any |
| | D.....2 | 50.04.0125 | 1N 4448 | | Any |
| | D.....3 | 50.04.0125 | 1N 4448 | | Any |
| | D.....4 | 50.04.0125 | 1N 4448 | | Any |
| | D.....5 | 50.04.0125 | 1N 4448 | | Any |



| IND. | POS.NO. | PART NO. | VALUE | SPECIFICATIONS / EQUIVALENT | MANUF. |
|---|---|---|---|---|---|
| | D.....7 | 50.04.0125 | 1N 4448 | | Any |
| | D.....8 | 50.04.0125 | 1N 4448 | | Any |
| | D.....9 | 50.04.0125 | 1N 4448 | | Any |
| | D.....10 | 50.04.0125 | 1N 4448 | | Any |
| | DL....1 | 50.34.2702 | LED | yellow SPY5551 REC / MV53123 | STA/GI |
| | DL....2 | 50.04.2701 | LED | red SPR5551 REC / MV57123 | STA/GI |
| | DL....3 | 50.34.2702 | LED | yellow SPY5551 REC / MV53123 | STA/GI |
| | DL....4 | 50.04.2702 | LED | yellow SPY5551 REC / MV53123 | STA/GI |
| | DL....6 | 1.726.270.02 | LED | Diffusor for LCD | STU |
| | DLO....1 | 50.04.3001 | MST 804 | Slotted Optical Switch/ISTS804 | |
| | DP....1 | 50.04.2136 | 8P# 50 | | PH |
| | IC....1 | 1.725.290.08 | uP | I/O Processor B250 | STU |
| | IC....2 | 1.725.295.05 | uP | Micro controller PCF84C80 CMOS | STU |
| | IC....3 | 50.11.0121 | TBA2800 | IR Detector | ITT |
| | IC....4 | 50.52.0001 | SED2020 | FoA FIP-Driver | SE |
| | IC....5 | 50.52.0001 | SED2020 | FoA FIP-Driver | SE |
| | IC....6 | 50.52.0001 | SED2020 | FoA FIP-Driver | SE |
| | IC....7 | 50.16.0116 | PCF8577 | LCD-Driver | PH |
| | IC....8 | 50.17.1595 | 74HC595 | 8Bit Shift reg. with output latch | DIV |
| | IC....9 | 50.07.1538 | 4538 | Dual Monoflop CMOS | PH,MOT |
| | IC....10 | 50.11.0122 | TL7705 | Reset Generator | TI |
| | IC....11 | 50.17.1094 | 74HC04 | Hex Inverter | DIV |
| | IC....12 | 50.14.0152 | PCD8572 | 1 kBit EEPROM SNOS Unprogrammed | STU |
| | MP....1 | 1.726.270.14 | 1 PCS | MICROCOMPUTER PCB CARBON | STU |
| | MP....2 | 53.03.0228 | 40 PCS | IC Socket Pins | |
| | MP....6 | 1.726.270.03 | 1 PCS | Tube | STU |
| | MP....18 | 1.726.270.09 | 1 PCS | IR-Reflektor | STU |
| | P.....1 | 54.14.2003 | 26 Pin | Connector for Ribbon-Cable | |
| | Q.....1 | 50.03.0436 | BC237 | NPN Small signal | Any |
| | Q.....2 | 50.03.0515 | BC307 | PNP Small signal | Any |



| IND. | POS.NO. | PART NO. | VALUE | SPECIFICATIONS / EQUIVALENT | MANUF. |
|---|---|---|---|---|---|
| | Q.....5 | 50.03.0436 | BC237 | NPN Small signal | Any |
| | Q.....7 | 50.03.0436 | BC237 | NPN Small signal | Any |
| | Q.....8 | 50.03.0436 | BC237 | NPN Small signal | Any |
| | R.....1 | 57.11.4102 | 1 K | 2%, 0.25W, MF | |
| | R.....2 | 57.11.4222 | 2.2 K | 2%, 0.25W, MF | |
| | R.....3 | 57.11.4332 | 3.3 K | 2%, 0.25W, MF | |
| | R.....4 | 57.11.4332 | 3.3 K | 2%, 0.25W, MF | |
| | R.....5 | 57.11.4222 | 2.2 K | 2%, 0.25W, MF | |
| | R.....6 | 57.11.4102 | 1 K | 2%, 0.25W, MF | |
| | R.....7 | 57.11.4332 | 3.3 K | 2%, 0.25W, MF | |
| | R.....8 | 57.11.4332 | 3.3 K | 2%, 0.25W, MF | |
| | R.....9 | 57.11.4471 | 470 | 2%, 0.25W, MF | |
| | R.....11 | 57.11.4471 | 470 | 2%, 0.25W, MF | |
| | R.....12 | 57.11.4471 | 470 | 2%, 0.25W, MF | |
| | R.....13 | 57.11.4471 | 470 | 2%, 0.25W, MF | |
| | R.....14 | 57.11.4181 | 180 | 2%, 0.25W, MF | |
| | R.....16 | 57.11.3363 | 36 K | 1%, 0.25W, MF | |
| | R.....17 | 57.11.3183 | 18 K | 1%, 0.25W, MF | |
| | R.....18 | 57.11.3183 | 18 K | 1%, 0.25W, MF | |
| | R.....19 | 57.11.3183 | 18 K | 1%, 0.25W, MF | |
| | R.....20 | 57.11.3183 | 18 K | 1%, 0.25W, MF | |
| | R.....21 | 57.11.3183 | 18 K | 1%, 0.25W, MF | |
| | R.....22 | 57.11.3363 | 36 K | 1%, 0.25W, MF | |
| | R.....23 | 57.11.3363 | 36 K | 1%, 0.25W, MF | |
| | R.....24 | 57.11.3363 | 36 K | 1%, 0.25W, MF | |
| | R.....25 | 57.11.3363 | 36 K | 1%, 0.25W, MF | |
| | R.....26 | 57.11.3363 | 36 K | 1%, 0.25W, MF | |
| | R.....27 | 57.11.3363 | 36 K | 1%, 0.25W, MF | |
| | R.....28 | 57.11.4221 | 220 | 2%, 0.25W, MF | |
| | R.....29 | 57.11.4102 | 1 K | 2%, 0.25W, MF | |
| | R.....30 | 57.11.4472 | 4.7 K | 2%, 0.25W, MF | |
| | R.....31 | 57.11.4181 | 180 | 2%, 0.25W, MF | |
| | R.....32 | 57.11.4472 | 4.7 K | 2%, 0.25W, MF | |
| | R.....33 | 57.11.4821 | 820 | 2%, 0.25W, MF | |
| | R.....34 | 57.11.4104 | 100 K | 2%, 0.25W, MF | |
| | R.....35 | 57.11.4332 | 3.3 K | 2%, 0.25W, MF | |



| IND. | POS.NO. | PART NO. | VALUE | SPECIFICATIONS / EQUIVALENT | MANUF. |
|---|---|---|---|---|---|
| | R.....36 | 57.11.4332 | 3.3 K | 2%, 0.25W, MF | |
| | R.....37 | 57.11.4103 | 10 K | 2%, 0.25W, MF | |
| | R.....38 | 57.11.4332 | 3.3 K | 2%, 0.25W, MF | |
| | R.....39 | 57.11.4332 | 3.3 K | 2%, 0.25W, MF | |
| | R.....40 | 57.11.4332 | 3.3 K | 2%, 0.25W, MF | |
| | R.....41 | 57.11.4332 | 3.3 K | 2%, 0.25W, MF | |
| | R.....42 | 57.11.4332 | 3.3 K | 2%, 0.25W, MF | |
| | R.....43 | 57.11.4332 | 3.3 K | 2%, 0.25W, MF | |
| | R.....44 | 57.11.4332 | 3.3 K | 2%, 0.25W, MF | |
| | R.....45 | 57.11.4332 | 3.3 K | 2%, 0.25W, MF | |
| | R.....46 | 57.11.4332 | 3.3 K | 2%, 0.25W, MF | |
| | R.....47 | 57.11.4332 | 3.3 K | 2%, 0.25W, MF | |
| | R.....48 | 57.11.4332 | 3.3 K | 2%, 0.25W, MF | |
| | R.....49 | 57.11.4332 | 3.3 K | 2%, 0.25W, MF | |
| | R.....50 | 57.11.4332 | 3.3 K | 2%, 0.25W, MF | |
| | R.....51 | 57.11.4471 | 470 | 2%, 0.25W, MF | |
| | R.....52 | 57.11.4680 | 68 | 2%, 0.25W, MF | |
| | R.....56 | 57.11.4150 | 15 | 2%, 0.25W, MF | |
| | R.....57 | 57.11.4150 | 15 | 2%, 0.25W, MF | |
| | R.....58 | 57.11.4471 | 470 | 2%, 0.25W, MF | |
| | R.....59 | 57.11.4471 | 470 | 2%, 0.25W, MF | |
| | R.....60 | 57.11.4820 | 82 | 2%, 0.25W, MF | |
| | R.....61 | 57.11.4471 | 470 | 2%, 0.25W, MF | |
| | R.....62 | 57.11.4105 | 1 M | 2%, 0.25W, MF | |
| | R.....63 | 57.11.4820 | 82 | 2%, 0.25W, MF | |
| | R.....64 | 57.11.4471 | 470 | 2%, 0.25W, MF | |
| | R.....65 | 57.11.4123 | 12 K | 2%, 0.25W, MF | |
| | R.....66 | 57.11.3361 | 360 | 2%, 0.25W, MF | |
| | R.....67 | 58.02.4102 | 1 K | 20%, 0.1 W, Trimm-Pot. | |
| | R.....69 | 57.11.4472 | 4.7 K | 2%, 0.25W, MF | |
| | R.....70 | 58.02.4473 | 47 K | 20%, 0.1 W, Trimm-Pot. | |
| | R.....71 | 57.11.3623 | 62 K | 1%, 0.25W, MF | |
| | R.....72 | 57.11.4181 | 180 | 2%, 0.25W, MF | |
| | R.....73 | 57.11.4333 | 33 K | 2%, 0.25W, MF | |
| | R.....74 | 57.11.4103 | 10 K | 2%, 0.25W, MF | |
| | R.....75 | 57.11.4103 | 10 K | 2%, 0.25W, MF | |
| | R.....77 | 57.11.4332 | 3.3 K | 2%, 0.25W, MF | |



| IND. | POS.NO. | PART NO. | VALUE | SPECIFICATIONS / EQUIVALENT | MANUF. |
|---|---|---|---|---|---|
| (00) | R.....78 | 57.11.4332 | 3.3 K | 2%, 0.25W, MF | |
| (01) | R.....78 | 57.11.4182 | 1.8 K | 2%, 0.25W, MF | |
| | R.....79 | 57.11.3752 | 7.5 K | 2%, 0.25W, MF | |
| | R.....81 | 57.11.4221 | 220 | 2%, 0.25W, MF | |
| | R.....82 | 57.11.4221 | 220 | 2%, 0.25W, MF | |
| | R.....83 | 57.11.4821 | 820 | 2%, 0.25W, MF | |
| | R.....84 | 57.11.4181 | 180 | 2%, 0.25W, MF | |
| | R.....86 | 57.11.4332 | 3.3 K | 2%, 0.25W, MF | |
| | R.....87 | 57.11.4333 | 33 K | 2%, 0.25W, MF | |
| | R.....88 | 57.11.5225 | 2.2 M | 5%, 0.25W, MF | |
| | R.....89 | 57.11.4102 | 1 K | 2%, 0.25W, MF | |
| | R.....90 | 57.11.4472 | 4.7 K | 2%, 0.25W, MF | |
| | R.....91 | 57.11.4560 | 56 | 2%, 0.25W, MF | |
| | R.....92 | 57.11.4332 | 3.3 K | 2%, 0.25W, MF | |
| | R.....93 | 57.11.4332 | 3.3 K | 2%, 0.25W, MF | |
| | R.....94 | 57.11.4333 | 33 K | 2%, 0.25W, MF | |
| | R.....95 | 57.11.4222 | 2.2 K | 2%, 0.25W, MF | |
| | R.....96 | 57.11.4124 | 120 K | 2%, 0.25W, MF | |
| | R.....97 | 57.11.4159 | 1.5 | 2%, 0.25W, MF | |
| | R.....98 | 57.11.4563 | 56 K | 2%, 0.25W, MF | |
| | R.....99 | 57.11.4159 | 1.5 | 2%, 0.25W, MF | |
| | RP....1 | 57.99.0255 | LOR | 57K @10 Lux, 7K @100 Lux A9060 13 | Hei |
| | RZ....1 | 57.88.4104 | 8*100K | Resistor array | |
| | W.....1 | 1.010.323.64 | 7.5mm | Wire 0.6 mm diam. | |
| | W.....4 | 1.010.321.64 | 5 mm | Wire 0.6 mm diam. | |
| | XIC...2 | 53.03.0173 | 28 Pin | IC-Socket | |
| | XIC...12 | 53.03.0166 | 8 Pin | IC-Socket | |
| | Y.....1 | 89.01.0553 | SRX28595 | 4.9152MHz 100ppm/Gr.C/TD18/NMP049 | Ny/SaR |



CER=CERAMIC
EL=ELECTROLYTIC
MF=METALFILM
PETP= POLYESTER
MANUFACTURER:
Fu= Futaba
GI= General Instrument, Hei=Heimann, ITT= Intermetall,
NEC= Nippon Electric Corp, Ny= Nymph, Ph= Philips & Valvo
SaR= SaRonix, Suw= Suwa Seykosa, Sty= Stanley,
STU=Studer, TI= Texas Instrument

(0) 19.04.88 Original
(1) 29.02.88 Update Nr.1

ORIG 88/04/19 (01) 88/02/29

## MICROCOMPUTER PCB 1.725.291.20 B250 (–S)

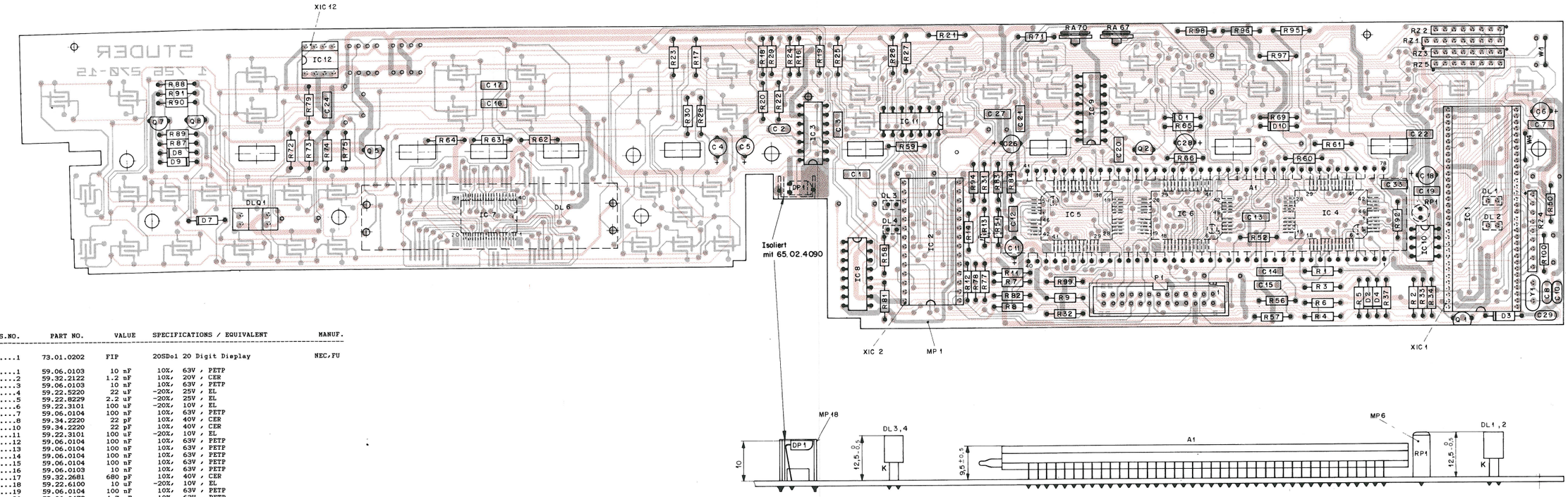


| IND. | POS.NO. | PART NO. | VALUE | SPECIFICATIONS / EQUIVALENT | MANUF. |
|---|---|---|---|---|---|
| | A.....1 | 73.01.0202 | FIP | 20SDo1 20 Digit Display | NEC/FU |
| | C.....1 | 59.06.0103 | 10 nF | 10%, 63V , PETP | |
| | C.....2 | 59.32.2122 | 1.2 nF | 10%, 20V , CER | |
| | C.....3 | 59.06.0103 | 10 nF | 10%, 63V , PETP | |
| | C.....4 | 59.22.5220 | 22 uF | -20%, 25V , EL | |
| | C.....5 | 59.22.8229 | 2.2 uF | -20%, 25V , EL | |
| | C.....6 | 59.22.3101 | 100 uF | -20%, 10V , EL | |
| | C.....7 | 59.06.0104 | 100 nF | 10%, 63V , PETP | |
| | C.....8 | 59.34.2220 | 22 pF | 10%, 40V , CER | |
| | C....10 | 59.34.2220 | 22 pF | 10%, 40V , CER | |
| | C....11 | 59.22.3101 | 100 uF | -20%, 10V , EL | |
| | C....12 | 59.06.0104 | 100 nF | 10%, 63V , PETP | |
| | C....13 | 59.06.0104 | 100 nF | 10%, 63V , PETP | |
| | C....14 | 59.06.0104 | 100 nF | 10%, 63V , PETP | |
| | C....15 | 59.06.0104 | 100 nF | 10%, 63V , PETP | |
| | C....16 | 59.06.0103 | 10 nF | 10%, 63V , PETP | |
| | C....17 | 59.32.2681 | 680 pF | 10%, 40V , CER | |
| | C....18 | 59.22.6100 | 10 uF | -20%, 10V , EL | |
| | C....19 | 59.06.0104 | 100 nF | 10%, 63V , PETP | |
| | C....20 | 59.06.0472 | 4.7 nF | 10%, 63V , PETP | |
| | C....21 | 59.06.5472 | 4.7 nF | 5%, 63V , PETP | |
| | C....22 | 59.06.0104 | 100 nF | 10%, 63V , PETP | |
| | C....24 | 59.06.0332 | 3.3 nF | 10%, 63V , PETP | |
| | C....26 | 59.22.3101 | 100 uF | -20%, 63V , EL | |
| | C....27 | 59.06.0104 | 100 nF | 10%, 63V , PETP | |
| | C....28 | 59.22.6100 | 10 uF | -20%, 25V , EL | |
| | C....29 | 59.34.2220 | 22 pF | 10%, 40V , CER | |
| | C....33 | 59.06.0104 | 100 nF | 10%, 63V , PETP | |
| | D.....1 | 50.04.0125 | 1N 4448 | | Any |
| | D.....2 | 50.04.0125 | 1N 4448 | | Any |
| | D.....3 | 50.04.0125 | 1N 4448 | | Any |
| | D.....4 | 50.04.0125 | 1N 4448 | | Any |
| | D.....7 | 50.04.0125 | 1N 4448 | | Any |
| | D.....8 | 50.04.0125 | 1N 4448 | | Any |
| | D.....9 | 50.04.0125 | 1N 4448 | | Any |



| IND. | POS.NO. | PART NO. | VALUE | SPECIFICATIONS / EQUIVALENT | MANUF. |
|---|---|---|---|---|---|
| | D....10 | 50.04.0125 | 1N 4448 | | Any |
| | DL....1 | 50.04.2702 | LED | yellow SPY5551 REC / MV53123 | STA/GI |
| | DL....2 | 50.04.2701 | LED | red SPR5551 REC / MV57123 | STA/GI |
| | DL....3 | 50.04.2702 | LED | yellow SPY5551 REC / MV53123 | STA/GI |
| | DL....4 | 50.04.2702 | LED | yellow SPY5551 REC / MV53123 | STA/GI |
| | DL....6 | 1.726.270.02 | LED | Diffusor for LCD | STU |
| | DLQ...1 | 50.04.3001 | MST 804 | Slotted Optical Switch/ISTS804 | |
| | DP....1 | 50.04.2136 | BPW 50 | | PH |
| | IC....1 | 1.726.273.20 | uP | I/O Processor 63A01Y | STU |
| | IC....2 | 1.725.295.05 | uP | Micro controller PCF84C80 CMOS | STU |
| | IC....3 | 50.11.0121 | TBA2800 | IR Detector | ITT |
| | IC....4 | 50.62.0001 | SED2020 | FoA FIP-Driver | SE |
| | IC....5 | 50.62.0001 | SED2020 | FoA FIP-Driver | SE |
| | IC....6 | 50.62.0001 | SED2020 | FoA FIP-Driver | SE |
| | IC....7 | 50.16.0116 | PCF8577 | LCD-Driver | PH |
| | IC....8 | 50.17.1595 | 74HC595 | 8Bit Shift reg. with output latch | DIV |
| | IC....9 | 50.07.1538 | 4538 | Dual Monoflop CMOS | PH/MOT |
| | IC....10 | 50.11.0122 | TL7705 | Reset Generator | TI |
| | IC....11 | 50.17.1004 | 74HC04 | Hex Inverter | DIV |
| | IC....12 | 50.14.0152 | PCD8572 | 1 kBit EEPROM SNOS Unprogrammed | STU |
| | MP....1 | 1.726.270.15 | 1 PCS | MICROCOMPUTER PCB 63A01Y CARBON | STU |
| | MP....6 | 1.726.270.03 | 1 PCS | Tube | STU |
| | MP...18 | 1.726.270.09 | 1 PCS | IR-Reflektor | STU |
| | P.....1 | 54.14.2003 | 26 Pin | Connector for Ribbon-Cable | |
| | Q.....1 | 50.03.0436 | BC237 | NPN Small signal | Any |
| | Q.....2 | 50.03.0515 | BC307 | PNP Small signal | Any |
| | Q.....5 | 50.03.0436 | BC237 | NPN Small signal | Any |
| | Q.....7 | 50.03.0436 | BC237 | NPN Small signal | Any |
| | Q.....8 | 50.03.0436 | BC237 | NPN Small signal | Any |



| IND. | POS.NO. | PART NO. | VALUE | SPECIFICATIONS / EQUIVALENT | MANUF. |
|---|---|---|---|---|---|
| | R.....1 | 57.11.3102 | 1 K | 2%, 0.25W , MF | |
| | R.....2 | 57.11.3222 | 2.2 K | 2%, 0.25W , MF | |
| | R.....3 | 57.11.3332 | 3.3 K | 2%, 0.25W , MF | |
| | R.....4 | 57.11.3332 | 3.3 K | 2%, 0.25W , MF | |
| | R.....5 | 57.11.3222 | 2.2 K | 2%, 0.25W , MF | |
| | R.....6 | 57.11.3102 | 1 K | 2%, 0.25W , MF | |
| | R.....7 | 57.11.3332 | 3.3 K | 2%, 0.25W , MF | |
| | R.....8 | 57.11.3332 | 3.3 K | 2%, 0.25W , MF | |
| | R.....9 | 57.11.3471 | 470 | 2%, 0.25W , MF | |
| | R....11 | 57.11.3471 | 470 | 2%, 0.25W , MF | |
| | R....12 | 57.11.3471 | 470 | 2%, 0.25W , MF | |
| | R....13 | 57.11.3471 | 470 | 2%, 0.25W , MF | |
| | R....14 | 57.11.3181 | 180 | 2%, 0.25W , MF | |
| | R....16 | 57.11.3363 | 36 K | 1%, 0.25W , MF | |
| | R....17 | 57.11.3183 | 18 K | 1%, 0.25W , MF | |
| | R....18 | 57.11.3183 | 18 K | 1%, 0.25W , MF | |
| | R....19 | 57.11.3183 | 18 K | 1%, 0.25W , MF | |
| | R....20 | 57.11.3183 | 18 K | 1%, 0.25W , MF | |
| | R....21 | 57.11.3183 | 18 K | 1%, 0.25W , MF | |
| | R....22 | 57.11.3363 | 36 K | 1%, 0.25W , MF | |
| | R....23 | 57.11.3363 | 36 K | 1%, 0.25W , MF | |
| | R....24 | 57.11.3363 | 36 K | 1%, 0.25W , MF | |
| | R....25 | 57.11.3363 | 36 K | 1%, 0.25W , MF | |
| | R....26 | 57.11.3363 | 36 K | 1%, 0.25W , MF | |
| | R....27 | 57.11.3363 | 36 K | 1%, 0.25W , MF | |
| | R....28 | 57.11.3221 | 220 | 2%, 0.25W , MF | |
| | R....29 | 57.11.3102 | 1 K | 2%, 0.25W , MF | |
| | R....30 | 57.11.3472 | 4.7 K | 2%, 0.25W , MF | |
| | R....31 | 57.11.3181 | 180 | 2%, 0.25W , MF | |
| | R....32 | 57.11.3472 | 4.7 K | 2%, 0.25W , MF | |
| | R....33 | 57.11.3821 | 820 | 2%, 0.25W , MF | |
| | R....34 | 57.11.3104 | 100 K | 2%, 0.25W , MF | |
| | R....37 | 57.11.3103 | 10 K | 2%, 0.25W , MF | |
| | R....50 | 57.11.3332 | 3.3 K | 2%, 0.25W , MF | |
| | R....51 | 57.11.3471 | 470 | 2%, 0.25W , MF | |
| | R....52 | 57.11.3680 | 68 | 2%, 0.25W , MF | |
| | R....56 | 57.11.3150 | 15 | 2%, 0.25W , MF | |



| IND. | POS.NO. | PART NO. | VALUE | SPECIFICATIONS / EQUIVALENT | MANUF. |
|---|---|---|---|---|---|
| | R....57 | 57.11.3150 | 15 | 2%, 0.25W , MF | |
| | R....58 | 57.11.3471 | 470 | 2%, 0.25W , MF | |
| | R....59 | 57.11.3471 | 470 | 2%, 0.25W , MF | |
| | R....60 | 57.11.3820 | 82 | 2%, 0.25W , MF | |
| | R....61 | 57.11.3471 | 470 | 2%, 0.25W , MF | |
| | R....62 | 57.11.3105 | 1 M | 2%, 0.25W , MF | |
| | R....63 | 57.11.3820 | 82 | 2%, 0.25W , MF | |
| | R....64 | 57.11.3471 | 470 | 2%, 0.25W , MF | |
| | R....65 | 57.11.3123 | 12 K | 2%, 0.25W , MF | |
| | R....66 | 57.11.3361 | 360 | 2%, 0.25W , MF | |
| | R....67 | 58.02.4102 | 1 K | 20%, 0.1 W , Trimm-Pot. | |
| | R....69 | 57.11.3472 | 4.7 K | 2%, 0.25W , MF | |
| | R....70 | 58.02.4473 | 47 K | 20%, 0.1 W , Trimm-Pot. | |
| | R....71 | 57.11.3623 | 62 K | 1%, 0.25W , MF | |
| | R....72 | 57.11.3181 | 180 | 2%, 0.25W , MF | |
| | R....73 | 57.11.3333 | 33 K | 2%, 0.25W , MF | |
| | R....74 | 57.11.3103 | 10 K | 2%, 0.25W , MF | |
| | R....75 | 57.11.3103 | 10 K | 2%, 0.25W , MF | |
| | R....77 | 57.11.3332 | 3.3 K | 2%, 0.25W , MF | |
| | R....78 | 57.11.3182 | 1.8 K | 2%, 0.25W , MF | |
| | R....79 | 57.11.3752 | 7.5 K | 2%, 0.25W , MF | |
| | R....81 | 57.11.3221 | 220 | 2%, 0.25W , MF | |
| | R....82 | 57.11.3221 | 220 | 2%, 0.25W , MF | |
| | R....83 | 57.11.3821 | 820 | 2%, 0.25W , MF | |
| | R....84 | 57.11.3181 | 180 | 2%, 0.25W , MF | |
| | R....87 | 57.11.3333 | 33 K | 2%, 0.25W , MF | |
| | R....88 | 57.11.5225 | 2.2 M | 5%, 0.25W , MF | |
| | R....89 | 57.11.3102 | 1 K | 2%, 0.25W , MF | |
| | R....90 | 57.11.3472 | 4.7 K | 2%, 0.25W , MF | |
| | R....91 | 57.11.3560 | 56 | 2%, 0.25W , MF | |
| | R....92 | 57.11.3332 | 3.3 K | 2%, 0.25W , MF | |
| | R....94 | 57.11.3333 | 33 K | 2%, 0.25W , MF | |
| | R....95 | 57.11.3222 | 2.2 K | 2%, 0.25W , MF | |
| | R....96 | 57.11.3124 | 120 K | 2%, 0.25W , MF | |
| | R....97 | 57.11.3159 | 1.5 | 2%, 0.25W , MF | |
| | R....98 | 57.11.3563 | 56 K | 2%, 0.25W , MF | |
| | R....99 | 57.11.3159 | 1.5 | 2%, 0.25W , MF | |



| IND. | POS.NO. | PART NO. | VALUE | SPECIFICATIONS / EQUIVALENT | MANUF. |
|---|---|---|---|---|---|
| | R...100 | 57.11.3332 | 3.3 K | 2%, 0.25W , MF | |
| | RP....1 | 57.99.0255 | LDR | 57K @10 Lux, 7K @100 Lux A9060 13 | Hei |
| | RZ....1 | 57.88.4104 | 8x100K | Resistor array | |
| | RZ....2 | 57.88.2332 | 4x3.3k | Resistor array | |
| | RZ....3 | 57.88.2332 | 4x3.3k | Resistor array | |
| | RZ....4 | 57.88.4104 | 8x100K | Resistor array | |
| | RZ....5 | 57.88.2332 | 4x3.3k | Resistor array | |
| | W.....1 | 1.010.323.64 | 7.5mm | Wire 0.6 mm diam. | |
| | W.....4 | 1.010.323.64 | 7.5mm | Wire 0.6 mm diam. | |
| | XIC...1 | 53.03.0364 | 64 Pin | IC-Socket | |
| | XIC...2 | 53.03.0173 | 28 Pin | IC-Socket | |
| | XIC..12 | 53.03.0166 | 8 Pin | IC-Socket | |
| | Y.....1 | 89.01.0560 | SRX28595 | 4.9152MHz 100ppm/Gr.C/TD18/NMF049 | Ny/SaR |

CER=CERAMIC
EL=ELECTROLYTIC
MF=METALFILM
PETP= POLYESTER
MANUFACTURER:
Fu= Futaba
GI= General Instrument, Hei=Heimann, ITT= Intermetall,
NEC= Nippon Electric Corp, Ny= Nyaph, Ph= Philips & Valvo
SaR= SaRonix, Suw= Suwa Seykosa, Sty= Stanley,
STU=Studer, TI= Texas Instrument

ORIG 89/02/13

**MAINS TRANSFORMER 220V 1.725.205.81 B150**
**POWER SUPPLY PCB 1.725.235.00 B150**

| 0 26.01.88 Steigmeier | . . | . . | . . | . . |
|---|---|---|---|---|
| | AMPLIFIER B 150 | | | PAGE 1 OF 1 |
| STUDER | MAINS TRANSFORMER | | SC | 1.725.205.00 |

| 0 02.02.88 Steigmeier | . . | . . | . . | . . |
|---|---|---|---|---|
| | AMPLIFIER B150 | | | PAGE 2 OF 2 |
| STUDER | POWER SUPPLY | | SC | 1.725.235.00 |

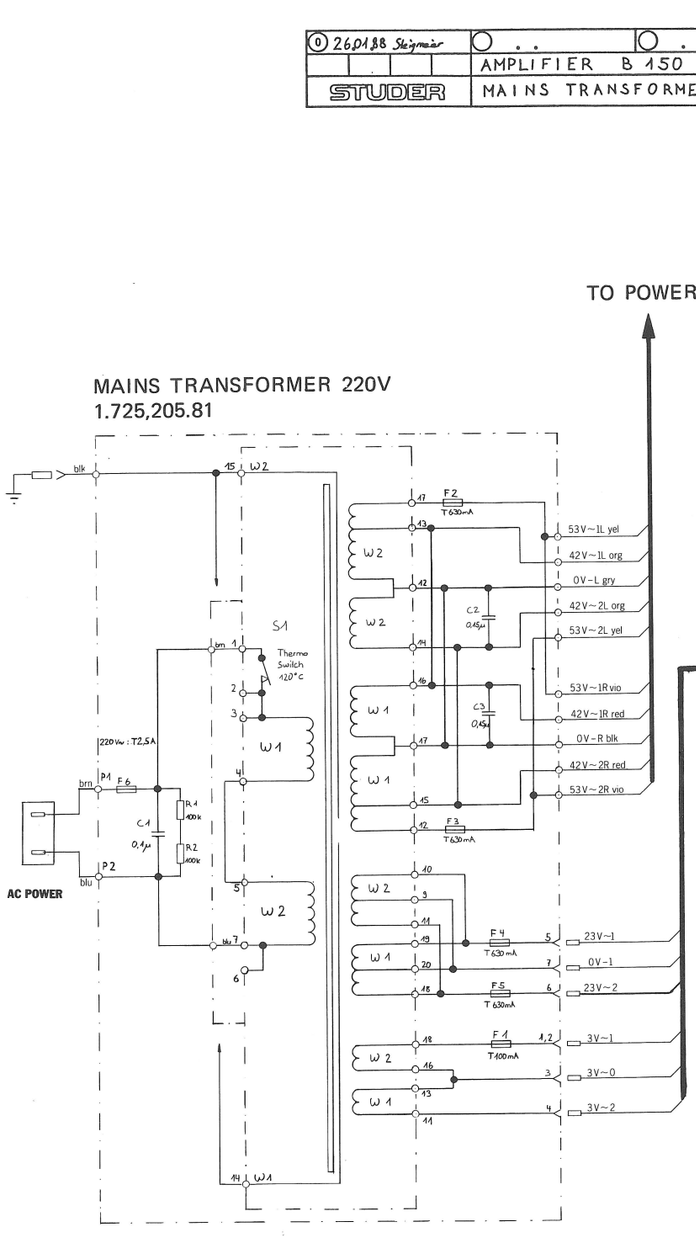


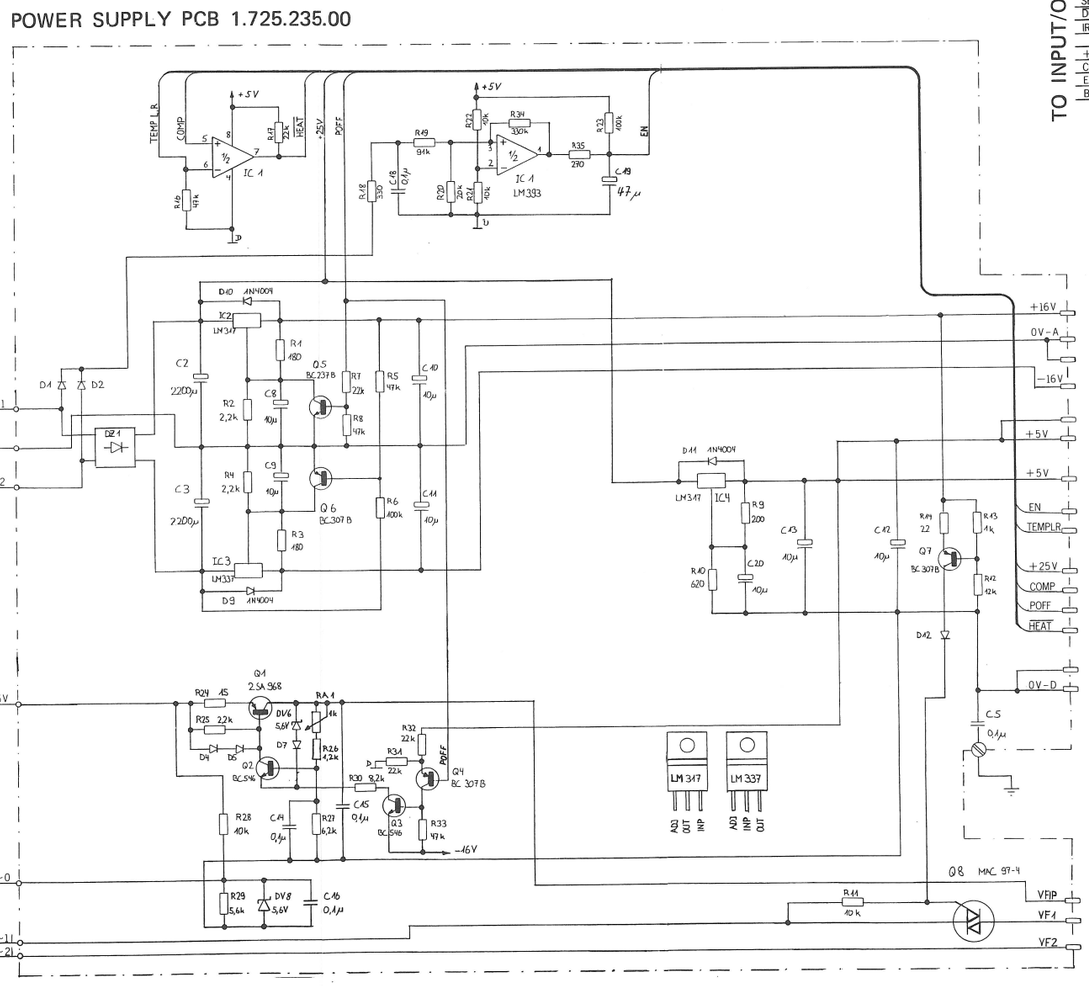


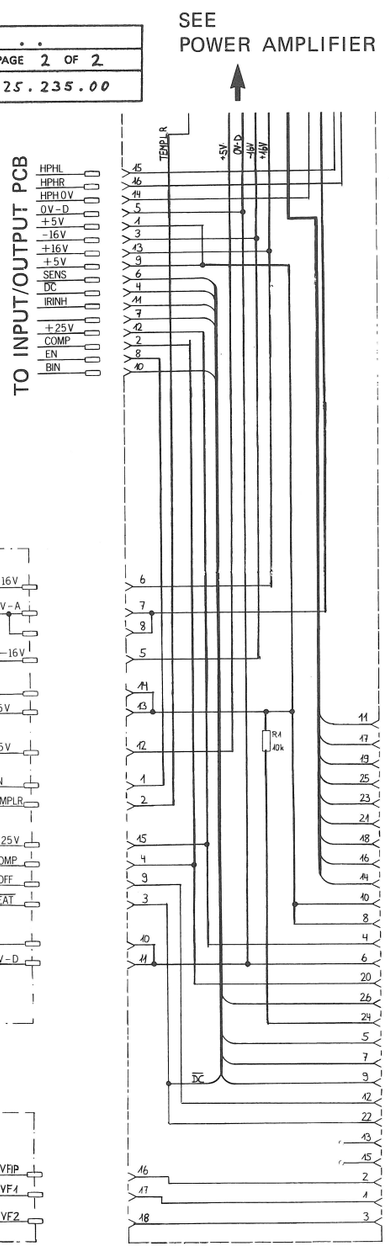


INTERCONNECTION PCB
1.725.285.00

MAINS TRANSFORMER 110V: 1.725.206.81
MAINS TRANSFORMER 240V: 1.725.207.81

## MAINS TRANSFORMER 220V 1.725.205.81 B150

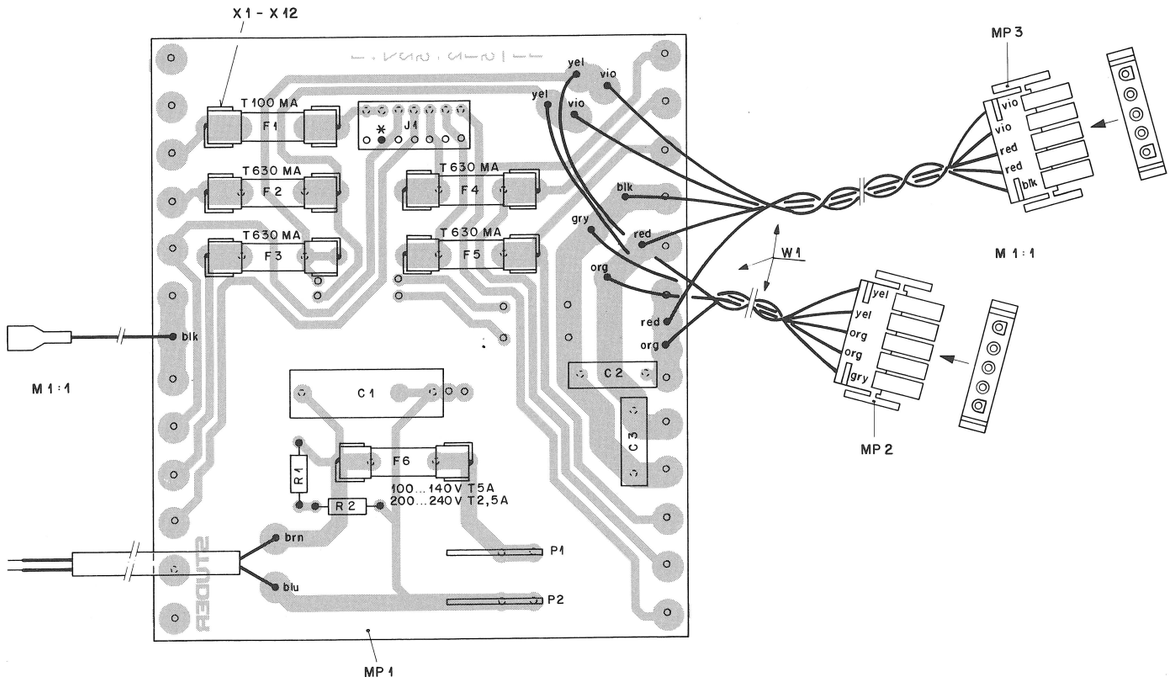


| TNO. | POS.NO. | PART NO. | VALUE | SPECIFICATIONS / EQUIVALENT | MANUF. |
|---|---|---|---|---|---|
| | C.....1 | 59.99.0453 | 0.1uF | IEC 65 | RIFA |
| | C.....2 | 59.02.2154 | 0.15uF | 100 V | |
| | C.....3 | 59.02.2154 | 0.15uF | 100 V | |
| | F.....1 | 51.01.0107 | | Fuse T 100mA | |
| | F.....2 | 51.01.0115 | | Fuse T 630mA | |
| | F.....3 | 51.01.0115 | | Fuse T 630mA | |
| | F.....4 | 51.01.0115 | | Fuse T 630mA | |
| | F.....5 | 51.31.0115 | | Fuse T 630mA | |
| | F.....6 | 51.01.0121 | | Fuse T 2.5A | |
| | MP....1 | 1.725.215.11 | | Distributor Board | |
| | MP....2 | 54.25.0305 | | Power Connector | |
| | MP....3 | 54.25.0305 | | Power Connector | |
| | MP....4 | 35.03.0109 | | Wire Belt | |
| | J.....1 | 54.31.0218 | 7pole | CIS-Socket | |
| | P.....1 | 54.32.0328 | | Power Connector | |
| | P.....2 | 54.02.0328 | | Power Connector | |
| | R.....1 | 57.11.3104 | 100K | 2%, 0.25W , MF | |
| | R.....2 | 57.11.3104 | 100K | 2%, 0.25W , MF | |
| | W.....1 | 1.725.215.93 | | Wire List | |
| | X.....1 | 53.03.0142 | | Fuse Holder | |
| | X.....2 | 53.03.0142 | | Fuse Holder | |
| | X.....3 | 53.03.0142 | | Fuse Holder | |
| | X.....4 | 53.03.0142 | | Fuse Holder | |
| | X.....5 | 53.03.0142 | | Fuse Holder | |
| | X.....6 | 53.03.0142 | | Fuse Holder | |
| | X.....7 | 53.03.0142 | | Fuse Holder | |
| | X.....8 | 53.03.0142 | | Fuse Holder | |
| | X.....9 | 53.03.0142 | | Fuse Holder | |
| | X....10 | 53.03.0142 | | Fuse Holder | |
| | X....11 | 53.03.0142 | | Fuse Holder | |



| TNO. | POS.NO. | PART NO. | VALUE | SPECIFICATIONS / EQUIVALENT | MANUF. |
|---|---|---|---|---|---|
| | X....12 | 53.03.0142 | | Fuse Holder | |

ORIG 88/01/06

## POWER SUPPLY PCB 1.725.235.00 B150

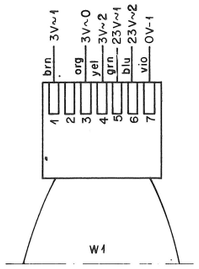


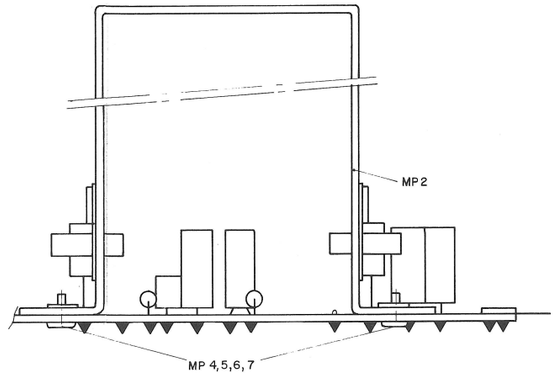


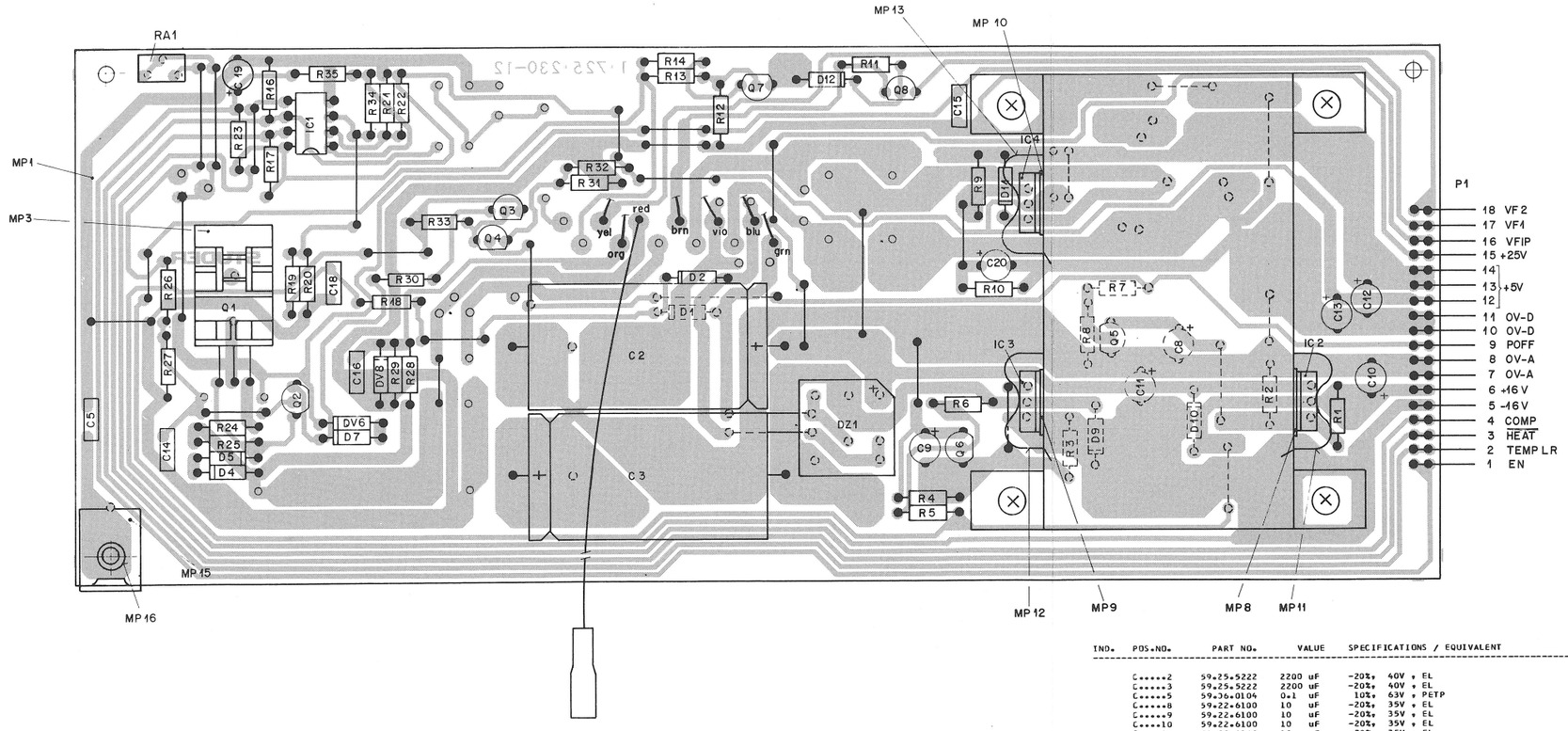


| IND. | POS.NO. | PART NO. | VALUE | SPECIFICATIONS / EQUIVALENT | | MANUF. |
|---|---|---|---|---|---|---|
| | MP....1 | 1.725.230.12 | | Power Supply - PCB | | ST |
| | MP....2 | 1.725.230.01 | | Heatsink | | ST |
| | MP....3 | 50.20.3004 | | Heatsink | | |
| | MP....4 | 21.99.0180 | | Screw M3*5 | | |
| | MP....5 | 21.99.0180 | | Screw M3*5 | | |
| | MP....6 | 21.99.0180 | | Screw M3*5 | | |
| | MP....7 | 21.99.0180 | | Screw M3*5 | | |
| | MP....8 | 50.20.0315 | | Isolator | | |
| | MP....9 | 50.20.0315 | | Isolator | | |
| | MP....10 | 50.20.0315 | | Isolator | | |
| | MP....11 | 50.20.2004 | | Montage-Clip for TO 220 | | |
| | MP....12 | 50.20.2004 | | Montage-Clip for TO 220 | | |
| | MP....13 | 50.20.2004 | | Montage-Clip for TO 220 | | |
| | MP....14 | 54.01.0233 | 7 pole | Connector CIS | | |
| | MP....15 | 1.726.780.01 | | Holder | | ST |
| | MP....16 | 28.21.1450 | | Tubular Rivet | | |
| | P.....1 | 54.31.0278 | 18-Pin | Plug assembly CIS | | AMP |
| | Q.....1 | 50.03.0801 | 2SA968 | Power Transistor | PNP | TO |
| | Q.....2 | 50.03.0491 | BC 546B | Small Signal Vce:60V | NPN | Any |
| | Q.....3 | 50.03.0491 | BC 546B | Small signal Vce:60V | NPN | Any |
| | Q.....4 | 50.03.0515 | BC 307B | Small signal | PNP | Any |
| | Q.....5 | 50.03.0436 | BC 237B | Small signal | NPN | Any |
| | Q.....6 | 50.03.0515 | BC 307B | Small signal | PNP | Any |
| | Q.....7 | 50.03.0515 | BC 307B | Small signal | PNP | Any |
| | Q.....8 | 50.08.0001 | MAC 97-4 | Triac 0.6 A, 200 V | | Mot |
| | R.....1 | 57.11.3181 | 180 | 2%, 0.25W , MF | | |
| | R.....2 | 57.11.3222 | 2.2 k | 2%, 0.25W , MF | | |
| | R.....3 | 57.11.3181 | 180 | 2%, 0.25W , MF | | |
| | R.....4 | 57.11.3222 | 2.2 k | 2%, 0.25W , MF | | |
| | R.....5 | 57.11.3473 | 47 k | 2%, 0.25W , MF | | |
| | R.....6 | 57.11.3104 | 100 k | 2%, 0.25W , MF | | |
| | R.....7 | 57.11.3223 | 22 k | 2%, 0.25W , MF | | |
| | R.....8 | 57.11.3473 | 47 k | 2%, 0.25W , MF | | |
| | R.....9 | 57.11.3201 | 200 | 1%, 0.25W , MF | | |



| IND. | POS.NO. | PART NO. | VALUE | SPECIFICATIONS / EQUIVALENT | MANUF. |
|---|---|---|---|---|---|
| | R....10 | 57.11.3621 | 620 | 1%, 0.25W , MF | |
| | R....11 | 57.11.3103 | 10 k | 2%, 0.25W , MF | |
| | R....12 | 57.11.3123 | 12 k | 2%, 0.25W , MF | |
| | R....13 | 57.11.3102 | 1 k | 2%, 0.25W , MF | |
| | R....14 | 57.11.3220 | 22 | 2%, 0.25W , MF | |
| | R....16 | 57.11.3473 | 47 k | 2%, 0.25W , MF | |
| | R....17 | 57.11.3223 | 22 k | 2%, 0.25W , MF | |
| | R....18 | 57.11.3331 | 330 | 2%, 0.25W , MF | |
| | R....19 | 57.11.3913 | 91 k | 2%, 0.25W , MF | |
| | R....20 | 57.11.3203 | 20 k | 2%, 0.25W , MF | |
| | R....21 | 57.11.3103 | 10 k | 2%, 0.25W , MF | |
| | R....22 | 57.11.3103 | 10 k | 2%, 0.25W , MF | |
| | R....23 | 57.11.3104 | 100 k | 2%, 0.25W , MF | |
| | R....24 | 57.11.3150 | 15 | 2%, 0.25W , MF | |
| | R....25 | 57.11.3222 | 2.2 k | 2%, 0.25W , MF | |
| | R....26 | 57.11.3122 | 1.2 k | 2%, 0.25W , MF | |
| | R....27 | 57.11.3622 | 6.2 k | 2%, 0.25W , MF | |
| | R....28 | 57.11.3103 | 10 k | 2%, 0.25W , MF | |
| | R....29 | 57.11.3562 | 5.6 k | 2%, 0.25W , MF | |
| | R....30 | 57.11.3822 | 8.2 k | 2%, 0.25W , MF | |
| | R....31 | 57.11.3223 | 22 k | 2%, 0.25W , MF | |
| | R....32 | 57.11.3223 | 22 k | 2%, 0.25W , MF | |
| | R....33 | 57.11.3473 | 47 k | 2%, 0.25W , MF | |
| | R....34 | 57.11.3334 | 330 k | 2%, 0.25W , MF | |
| | R....35 | 57.11.3271 | 270 | 2%, 0.25W , MF | |
| (01) | RA....1 | 58.01.9102 | 1 k | 10%, 0.5 W | |
| | W.....1 | 1.725.235.93 | | Wire list | |



| IND. | POS.NO. | PART NO. | VALUE | SPECIFICATIONS / EQUIVALENT | | MANUF. |
|---|---|---|---|---|---|---|
| | C.....2 | 59.25.5222 | 2200 uF | -20%, 40V , EL | | |
| | C.....3 | 59.25.5222 | 2200 uF | -20%, 40V , EL | | |
| | C.....5 | 59.36.0104 | 0.1 uF | 10%, 63V , PETP | | |
| | C.....8 | 59.22.6100 | 10 uF | -20%, 35V , EL | | |
| | C.....9 | 59.22.6100 | 10 uF | -20%, 35V , EL | | |
| | C....10 | 59.22.6100 | 10 uF | -20%, 35V , EL | | |
| | C....11 | 59.22.6100 | 10 uF | -20%, 35V , EL | | |
| | C....12 | 59.22.6100 | 10 uF | -20%, 35V , EL | | |
| | C....13 | 59.22.6100 | 10 uF | -20%, 35V , EL | | |
| | C....14 | 59.06.0104 | 0.1 uF | 10%, 63V , PETP | | |
| | C....15 | 59.06.0104 | 0.1 uF | 10%, 63V , PETP | | |
| | C....16 | 59.06.0104 | 0.1 uF | 10%, 63V , PETP | | |
| | C....18 | 59.36.0104 | 0.1 uF | 10%, 63V , PETP | | |
| | C....19 | 59.22.3470 | 47 uF | -20%, 10V , EL | | |
| | C....20 | 59.22.6100 | 10 uF | -20%, 35V , EL | | |
| (00) | D.....1 | 50.04.0125 | 1N 4448 | | SI | Any |
| (02) | D.....1 | 50.04.0133 | BAV 20 | | SI | |
| (00) | D.....2 | 50.04.0125 | 1N 4448 | | SI | Any |
| (02) | D.....2 | 50.04.0133 | BAV 20 | | SI | |
| | D.....4 | 50.04.0125 | 1N 4448 | | SI | Any |
| | D.....5 | 50.04.0125 | 1N 4448 | | SI | Any |
| | D.....7 | 50.04.0125 | 1N 4448 | | SI | Any |
| | D.....9 | 50.04.0105 | 1N 4004 | | SI | Any |
| | D....10 | 50.04.0105 | 1N 4004 | | SI | Any |
| | D....11 | 50.04.0105 | 1N 4004 | | SI | Any |
| | D....12 | 50.04.0125 | 1N 4448 | | SI | Any |
| | DV....6 | 50.04.1108 | 5.6 V | 5%, 0.4 W | Z | Any |
| | DV....8 | 50.04.1108 | 5.6 V | 5%, 0.4 W | Z | Any |
| | DZ....1 | 79.31.0226 | | 280 V, 2 A | GI | |
| | IC....1 | 50.05.0283 | LM 393 N | Dual comp.with open coll. / LM 393 P | NS,TI | |
| | IC....2 | 50.10.0104 | LM 317 T | +1.2-37 V ,V-Reg./LM317 KC | NS,TI | |
| | IC....3 | 50.10.0105 | LM 337 T | -1.2-37 V ,V-Reg./LM337 KC | NS,TI | |
| | IC....4 | 50.10.0104 | LM 317 T | +1.2-37 V ,V-Reg./LM317 KC | NS,TI | |



(01) Adjustement of FIP brightness
(02) Quality improvement

EL=Electrolytic, CER=Ceramic, PETP=Polyester, SI=Silicon, MF=Metalfilm,

Manufacturer: NS=National Semiconductors, TI=Texas Instruments
MOT=Motorola,PH=Philips,Sie=Siemens,ST=Studer

ORIG 88/01/07 (01) 89/02/29 (02) 88/08/25

## INPUT/OUTPUT 1.725.245.00 B150 PART I

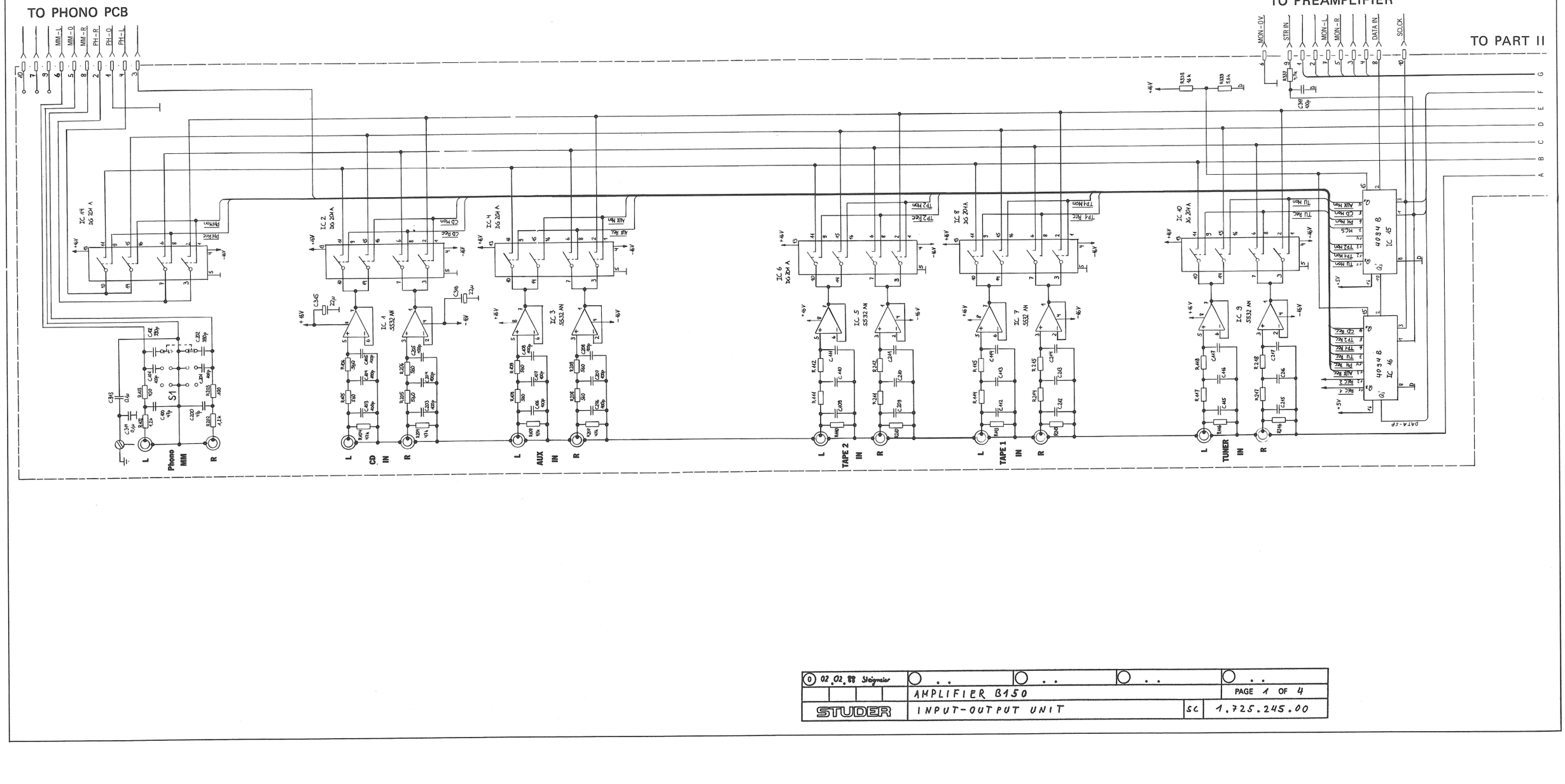


| | | | | |
|---|---|---|---|---|
| 02.02.88 Steigmeier | | | | |
| | AMPLIFIER B150 | | | PAGE 1 OF 4 |
| STUDER | INPUT-OUTPUT UNIT | SC | 1.725.245.00 | |

## INPUT/OUTPUT PCB 1.725.245.00 B150 PART II

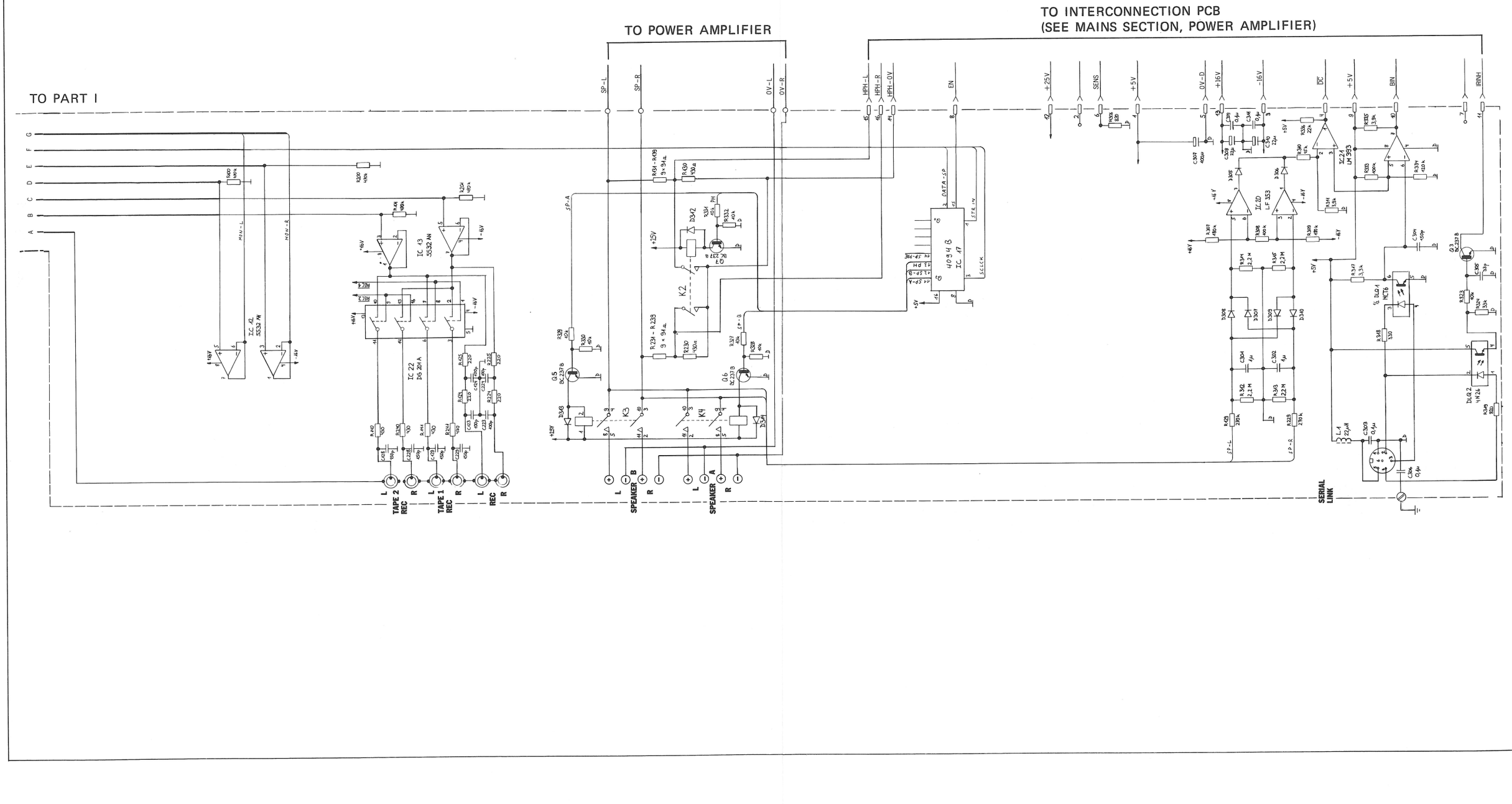

## INPUT/OUTPUT PCB 1.725.245.00 B150

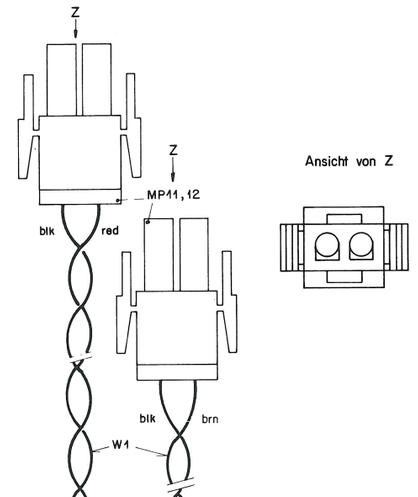


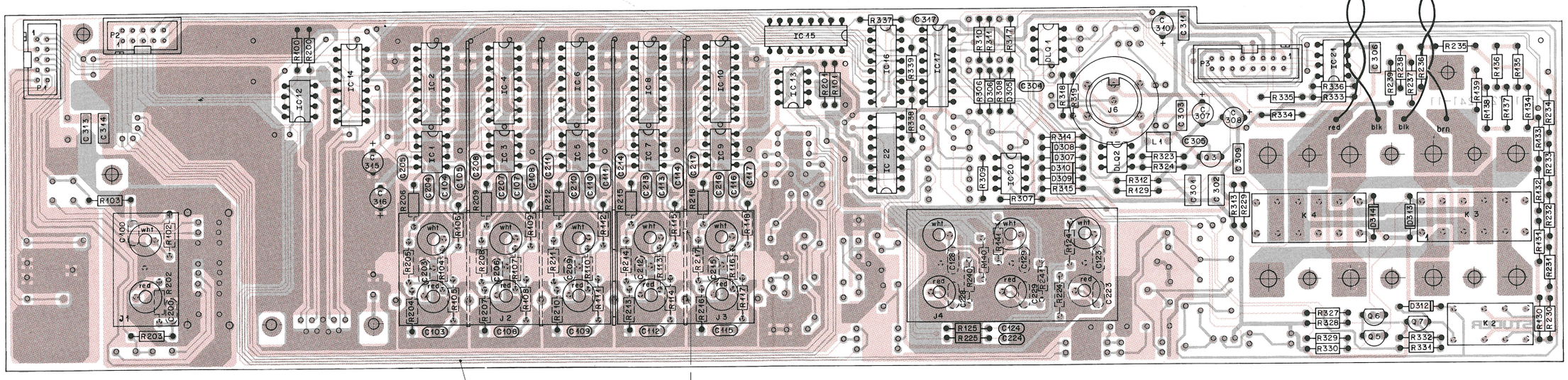

## INPUT/OUTPUT PCB 1.725.245.00 B150

| IND. | POS.NO. | PART NO. | VALUE | SPECIFICATIONS / EQUIVALENT | MANUF. |
|---|---|---|---|---|---|
| | C...100 | 59.34.4151 | 150 pF | 10%, 25V, Cer | |
| | C...103 | 59.34.4101 | 100 pF | 10%, 25V, Cer | |
| | C...104 | 59.34.4101 | 100 pF | 10%, 25V, Cer | |
| | C...105 | 59.34.4101 | 100 pF | 10%, 25V, Cer | |
| | C...106 | 59.34.4101 | 100 pF | 10%, 25V, Cer | |
| | C...107 | 59.34.4101 | 100 pF | 10%, 25V, Cer | |
| | C...108 | 59.34.4101 | 100 pF | 10%, 25V, Cer | |
| | C...109 | 59.34.4101 | 100 pF | 10%, 25V, Cer | |
| | C...110 | 59.34.4101 | 100 pF | 10%, 25V, Cer | |
| | C...111 | 59.34.4101 | 100 pF | 10%, 25V, Cer | |
| | C...112 | 59.34.4101 | 100 pF | 10%, 25V, Cer | |
| | C...113 | 59.34.4101 | 100 pF | 10%, 25V, Cer | |
| | C...114 | 59.34.4101 | 100 pF | 10%, 25V, Cer | |
| | C...115 | 59.34.4101 | 100 pF | 10%, 25V, Cer | |
| | C...116 | 59.34.4101 | 100 pF | 10%, 25V, Cer | |
| | C...117 | 59.34.4101 | 100 pF | 10%, 25V, Cer | |
| | C...123 | 59.34.4101 | 100 pF | 10%, 25V, Cer | |
| | C...124 | 59.34.4101 | 100 pF | 10%, 25V, Cer | |
| | C...128 | 59.34.4151 | 150 pF | 10%, 25V, Cer | |
| | C...129 | 59.34.4151 | 150 pF | 10%, 25V, Cer | |
| | C...200 | 59.34.4151 | 150 pF | 10%, 25V, Cer | |
| | C...203 | 59.34.4101 | 100 pF | 10%, 25V, Cer | |
| | C...204 | 59.34.4101 | 100 pF | 10%, 25V, Cer | |
| | C...205 | 59.34.4101 | 100 pF | 10%, 25V, Cer | |
| | C...206 | 59.34.4101 | 100 pF | 10%, 25V, Cer | |
| | C...207 | 59.34.4101 | 100 pF | 10%, 25V, Cer | |
| | C...208 | 59.34.4101 | 100 pF | 10%, 25V, Cer | |
| | C...209 | 59.34.4101 | 100 pF | 10%, 25V, Cer | |
| | C...210 | 59.34.4101 | 100 pF | 10%, 25V, Cer | |
| | C...211 | 59.34.4101 | 100 pF | 10%, 25V, Cer | |
| | C...212 | 59.34.4101 | 100 pF | 10%, 25V, Cer | |
| | C...213 | 59.34.4101 | 100 pF | 10%, 25V, Cer | |
| | C...214 | 59.34.4101 | 100 pF | 10%, 25V, Cer | |
| | C...215 | 59.34.4101 | 100 pF | 10%, 25V, Cer | |
| | C...216 | 59.34.4101 | 100 pF | 10%, 25V, Cer | |
| | C...217 | 59.34.4101 | 100 pF | 10%, 25V, Cer | |
| | C...223 | 59.34.4101 | 100 pF | 10%, 25V, Cer | |



| IND. | POS.NO. | PART NO. | VALUE | SPECIFICATIONS / EQUIVALENT | MANUF. |
|---|---|---|---|---|---|
| | C...224 | 59.34.4101 | 100 pF | 10%, 25V, Cer | |
| | C...228 | 59.34.4151 | 150 pF | 10%, 25V, Cer | |
| | C...229 | 59.34.4151 | 150 pF | 10%, 25V, Cer | |
| | C...301 | 59.06.0105 | 1.0 uF | 10%, 50V, PETP | |
| | C...302 | 59.06.0105 | 1.0 uF | 10%, 50V, PETP | |
| | C...303 | 59.06.0104 | 0.1 uF | 10%, 63V, PETP | |
| | C...304 | 59.34.4151 | 150 pF | 10%, 25V, Cer | |
| | C...305 | 59.34.2330 | 33 pF | 10%, 25V, Cer | |
| | C...306 | 59.06.0104 | 0.1 uF | 10%, 63V, PETP | |
| | C...307 | 59.22.3101 | 100 uF | -20%, 10V, EL | |
| | C...308 | 59.22.5220 | 22 uF | -20%, 25V, EL | |
| | C...309 | 59.06.0104 | 0.1 uF | 10%, 63V, PETP | |
| | C...310 | 59.22.5220 | 22 uF | -20%, 25V, EL | |
| | C...311 | 59.06.0104 | 0.1 uF | 10%, 63V, PETP | |
| | C...313 | 59.06.0104 | 0.1 uF | 10%, 63V, PETP | |
| | C...314 | 59.06.0104 | 0.1 uF | 10%, 63V, PETP | |
| | C...315 | 59.22.5220 | 22 uF | -20%, 25V, EL | |
| | C...316 | 59.22.5220 | 22 uF | -20%, 25V, EL | |
| | C...317 | 59.34.4101 | 100 pF | 10%, 25V, Cer | |
| | D...305 | 50.04.0125 | 1N 4448 | | |
| | D...306 | 50.04.0125 | 1N 4448 | | |
| | D...307 | 50.04.0125 | 1N 4448 | | |
| | D...308 | 50.04.0125 | 1N 4448 | | |
| | D...309 | 50.04.0125 | 1N 4448 | | |
| | D...310 | 50.04.0125 | 1N 4448 | | |
| | D...312 | 50.04.0125 | 1N 4448 | | |
| | D...313 | 50.04.0125 | 1N 4448 | | |
| | D...314 | 50.04.0125 | 1N 4448 | | |
| | OL3...1 | 50.99.0111 | MCT-6 | Opto-Coupler Dual | |
| | OL3...2 | 50.99.0126 | 4 N 28 | Opto-Coupler | |
| | IC...1 | 50.09.0106 | NE 5532AN | Low Noise OP-AMP Dual | Sig |
| (00) | IC...2 | 50.07.0034 | DG 201ACJ | HI-201-5 | SX+Ha |
| (01) | IC...2 | 50.19.0300 | DG 211 CJ | HI-201-5 | MAXIM |
| | IC...3 | 50.09.0106 | NE 5532AN | Low Noise OP-AMP Dual | Sig |



| IND. | POS.NO. | PART NO. | VALUE | SPECIFICATIONS / EQUIVALENT | MANUF. |
|---|---|---|---|---|---|
| | MP...3 | 1.725.240.01 | | Screen | |
| | MP...4 | 1.725.240.01 | | Screen | |
| | MP...5 | 1.725.240.01 | | Screen | |
| | MP...11 | 54.25.0302 | 2-pole | Power Connector | |
| | MP...12 | 54.25.0302 | 2-pole | Power Connector | |
| | P.....1 | 54.14.2001 | 10 pole | Flat Cable Connector | |
| | P.....2 | 54.14.2001 | 10 pole | Flat Cable Connector | |
| | P.....3 | 54.14.2002 | 16 pole | Flat Cable Connector | |
| | Q.....3 | 50.03.0436 | BC 237B | NPN | |
| | Q.....5 | 50.03.0436 | BC 237B | NPN | |
| | Q.....6 | 50.03.0436 | BC 237B | NPN | |
| | Q.....7 | 50.03.0436 | BC 237B | NPN | |
| | R...100 | 57.11.3474 | 470 KOhm | 2%, 0.25W, MF | |
| | R...101 | 57.11.3474 | 470 KOhm | 2%, 0.25W, MF | |
| | R...102 | 57.11.3122 | 1.2 KOhm | 2%, 0.25W, MF | |
| | R...103 | 57.11.3101 | 100 Ohm | 2%, 0.25W, MF | |
| | R...104 | 57.11.3473 | 47 KOhm | 2%, 0.25W, MF | |
| | R...105 | 57.11.3561 | 560 Ohm | 2%, 0.25W, MF | |
| | R...106 | 57.11.3561 | 560 Ohm | 2%, 0.25W, MF | |
| | R...107 | 57.11.3473 | 47 KOhm | 2%, 0.25W, MF | |
| | R...108 | 57.11.3561 | 560 Ohm | 2%, 0.25W, MF | |
| | R...109 | 57.11.3561 | 560 Ohm | 2%, 0.25W, MF | |
| | R...110 | 57.11.3473 | 47 KOhm | 2%, 0.25W, MF | |
| | R...111 | 57.11.3561 | 560 Ohm | 2%, 0.25W, MF | |
| | R...112 | 57.11.3561 | 560 Ohm | 2%, 0.25W, MF | |
| | R...113 | 57.11.3473 | 47 KOhm | 2%, 0.25W, MF | |
| | R...114 | 57.11.3561 | 560 Ohm | 2%, 0.25W, MF | |
| | R...115 | 57.11.3561 | 560 Ohm | 2%, 0.25W, MF | |
| | R...116 | 57.11.3473 | 47 KOhm | 2%, 0.25W, MF | |
| | R...117 | 57.11.3561 | 560 Ohm | 2%, 0.25W, MF | |
| | R...118 | 57.11.3561 | 560 Ohm | 2%, 0.25W, MF | |
| | R...124 | 57.11.3221 | 220 Ohm | 2%, 0.25W, MF | |
| | R...125 | 57.11.3221 | 220 Ohm | 2%, 0.25W, MF | |
| | R...129 | 57.11.3274 | 270 KOhm | 2%, 0.25W, MF | |



| IND. | POS.NO. | PART NO. | VALUE | SPECIFICATIONS / EQUIVALENT | MANUF. |
|---|---|---|---|---|---|
| | R...130 | 57.11.3431 | 430 Ohm | 2%, 0.25W, MF | |
| | R...131 | 57.11.3910 | 91 Ohm | 2%, 0.25W, MF | |
| | R...132 | 57.11.3910 | 91 Ohm | 2%, 0.25W, MF | |
| | R...133 | 57.11.3910 | 91 Ohm | 2%, 0.25W, MF | |
| | R...134 | 57.11.3910 | 91 Ohm | 2%, 0.25W, MF | |
| | R...135 | 57.11.3910 | 91 Ohm | 2%, 0.25W, MF | |
| | R...136 | 57.11.3910 | 91 Ohm | 2%, 0.25W, MF | |
| | R...137 | 57.11.3910 | 91 Ohm | 2%, 0.25W, MF | |
| | R...138 | 57.11.3910 | 91 Ohm | 2%, 0.25W, MF | |
| | R...139 | 57.11.3910 | 91 Ohm | 2%, 0.25W, MF | |
| | R...140 | 57.11.3431 | 430 Ohm | 2%, 0.25W, MF | |
| | R...141 | 57.11.3431 | 430 Ohm | 2%, 0.25W, MF | |
| | R...200 | 57.11.3474 | 470 KOhm | 2%, 0.25W, MF | |
| | R...201 | 57.11.3474 | 470 KOhm | 2%, 0.25W, MF | |
| | R...202 | 57.11.3122 | 1.2 KOhm | 2%, 0.25W, MF | |
| | R...203 | 57.11.3101 | 100 Ohm | 2%, 0.25W, MF | |
| | R...204 | 57.11.3473 | 47 KOhm | 2%, 0.25W, MF | |
| | R...205 | 57.11.3561 | 560 Ohm | 2%, 0.25W, MF | |
| | R...206 | 57.11.3561 | 560 Ohm | 2%, 0.25W, MF | |
| | R...207 | 57.11.3473 | 47 KOhm | 2%, 0.25W, MF | |
| | R...208 | 57.11.3561 | 560 Ohm | 2%, 0.25W, MF | |
| | R...209 | 57.11.3561 | 560 Ohm | 2%, 0.25W, MF | |
| | R...210 | 57.11.3473 | 47 KOhm | 2%, 0.25W, MF | |
| | R...211 | 57.11.3561 | 560 Ohm | 2%, 0.25W, MF | |
| | R...212 | 57.11.3561 | 560 Ohm | 2%, 0.25W, MF | |
| | R...213 | 57.11.3473 | 47 KOhm | 2%, 0.25W, MF | |
| | R...214 | 57.11.3561 | 560 Ohm | 2%, 0.25W, MF | |
| | R...215 | 57.11.3561 | 560 Ohm | 2%, 0.25W, MF | |
| | R...216 | 57.11.3473 | 47 KOhm | 2%, 0.25W, MF | |
| | R...217 | 57.11.3561 | 560 Ohm | 2%, 0.25W, MF | |
| | R...218 | 57.11.3561 | 560 Ohm | 2%, 0.25W, MF | |
| | R...224 | 57.11.3221 | 220 Ohm | 2%, 0.25W, MF | |
| | R...225 | 57.11.3221 | 220 Ohm | 2%, 0.25W, MF | |
| | R...229 | 57.11.3274 | 270 KOhm | 2%, 0.25W, MF | |
| | R...230 | 57.11.3431 | 430 Ohm | 2%, 0.25W, MF | |
| | R...231 | 57.11.3910 | 91 Ohm | 2%, 0.25W, MF | |
| | R...232 | 57.11.3910 | 91 Ohm | 2%, 0.25W, MF | |



| IND. | POS.NO. | PART NO. | VALUE | SPECIFICATIONS / EQUIVALENT | MANUF. |
|---|---|---|---|---|---|
| (00) | IC...4 | 50.07.0034 | DG 201ACJ | HI-201-5 | SX+Ha |
| (01) | IC...4 | 50.19.0300 | DG 211 CJ | HI-201-5 | MAXIM |
| | IC...5 | 50.09.0106 | NE 5532AN | Low Noise OP-AMP Dual | Sig |
| (00) | IC...6 | 50.07.0034 | DG 201ACJ | HI-201-5 | SX+Ha |
| (01) | IC...6 | 50.19.0300 | DG 211 CJ | HI-201-5 | MAXIM |
| | IC...7 | 50.09.0106 | NE 5532AN | Low Noise OP-AMP Dual | Sig |
| (00) | IC...8 | 50.07.0034 | DG 201ACJ | HI-201-5 | SX+Ha |
| (01) | IC...8 | 50.19.0300 | DG 211 CJ | HI-201-5 | MAXIM |
| | IC...9 | 50.09.0106 | NE 5532AN | Low Noise OP-AMP Dual | Sig |
| (00) | IC...10 | 50.07.0034 | DG 201ACJ | HI-201-5 | SX+Ha |
| (01) | IC...10 | 50.19.0300 | DG 211 CJ | HI-201-5 | MAXIM |
| | IC...12 | 50.09.0106 | NE 5532AN | Low Noise OP-AMP Dual | Sig |
| | IC...13 | 50.09.0106 | NE 5532AN | Low Noise OP-AMP Dual | Sig |
| (00) | IC...14 | 50.07.0034 | DG 201ACJ | HI-201-5 | SX+Ha |
| (01) | IC...14 | 50.19.0300 | DG 211 CJ | HI-201-5 | MAXIM |
| | IC...15 | 50.07.0018 | MC 14094B | HEF 4094B | Mot+Ph |
| | IC...16 | 50.07.0018 | MC 14094B | HEF 4094B | Mot+Ph |
| | IC...17 | 50.07.0013 | MC 14094B | HEF 4094B | Mot+Ph |
| | IC...20 | 50.09.0101 | TL 072ACP | LF 353 | TI+NS |
| | IC...21 | 50.05.0283 | LM 393 | Low Power Comparator Dual | TI |
| (00) | IC...22 | 50.07.0034 | DG 201ACJ | HI-201-5 | SX+Ha |
| (01) | IC...22 | 50.19.0300 | DG 211 CJ | HI-201-5 | MAXIM |
| | J.....1 | 54.21.2012 | 2-pole | Pin Jacks | WAKA |
| | J.....2 | 54.21.2014 | 6-pole | Pin Jacks | WAKA |
| | J.....3 | 54.21.2013 | 4-pole | Pin Jacks | |
| | J.....4 | 54.21.2014 | 6-pole | Pin Jacks | |
| | J.....6 | 54.21.1199 | 6-pole | Connector DIN | WAKA |
| | K.....2 | 56.04.0161 | | 24 V, 2A, 1100 Ohm | Zettler, Omron |
| | K.....3 | 56.04.0132 | | 24 V, 5A, 2850 Ohm | SDS |
| | K.....4 | 56.04.0132 | | 24 V, 5A, 2850 Ohm | SDS |
| | L.....1 | 62.02.3220 | 22 uH | HF-Choke R < 1,4 Ohm , I dc=200 mA | |
| | MP....1 | 1.725.241.11 | | Input-Output PCB | |
| | MP....2 | 1.725.240.01 | | Screen | |



| IND. | POS.NO. | PART NO. | VALUE | SPECIFICATIONS / EQUIVALENT | MANUF. |
|---|---|---|---|---|---|
| | R...233 | 57.11.3910 | 91 Ohm | 2%, 0.25W, MF | |
| | R...234 | 57.11.3910 | 91 Ohm | 2%, 0.25W, MF | |
| | R...235 | 57.11.3910 | 91 Ohm | 2%, 0.25W, MF | |
| | R...236 | 57.11.3910 | 91 Ohm | 2%, 0.25W, MF | |
| | R...237 | 57.11.3910 | 91 Ohm | 2%, 0.25W, MF | |
| | R...238 | 57.11.3910 | 91 Ohm | 2%, 0.25W, MF | |
| | R...239 | 57.11.3910 | 91 Ohm | 2%, 0.25W, MF | |
| | R...240 | 57.11.3431 | 430 Ohm | 2%, 0.25W, MF | |
| | R...241 | 57.11.3431 | 430 Ohm | 2%, 0.25W, MF | |
| | R...306 | 57.11.3821 | 820 Ohm | 2%, 0.25W, MF | |
| | R...307 | 57.11.3184 | 180 KOhm | 2%, 0.25W, MF | |
| | R...308 | 57.11.3104 | 100 KOhm | 2%, 0.25W, MF | |
| | R...309 | 57.11.3184 | 180 KOhm | 2%, 0.25W, MF | |
| | R...310 | 57.11.3153 | 15 KOhm | 2%, 0.25W, MF | |
| | R...311 | 57.11.3392 | 3.9 KOhm | 2%, 0.25W, MF | |
| (00) | R...312 | 57.11.3225 | 2.2 MOhm | 2%, 0.25W, MF | |
| (01) | R...312 | 57.11.5225 | 2.2 MOhm | 2%, 0.25W, MF | |
| (00) | R...313 | 57.11.3225 | 2.2 MOhm | 2%, 0.25W, MF | |
| (01) | R...313 | 57.11.5225 | 2.2 MOhm | 2%, 0.25W, MF | |
| (00) | R...314 | 57.11.3225 | 2.2 MOhm | 2%, 0.25W, MF | |
| (01) | R...314 | 57.11.5225 | 2.2 MOhm | 2%, 0.25W, MF | |
| (00) | R...315 | 57.11.3225 | 2.2 MOhm | 2%, 0.25W, MF | |
| (01) | R...315 | 57.11.5225 | 2.2 MOhm | 2%, 0.25W, MF | |
| | R...317 | 57.11.3332 | 3.3 KOhm | 2%, 0.25W, MF | |
| | R...318 | 57.11.3331 | 330 Ohm | 2%, 0.25W, MF | |
| | R...319 | 57.11.3821 | 820 Ohm | 2%, 0.25W, MF | |
| | R...323 | 57.11.3103 | 10 KOhm | 2%, 0.25W, MF | |
| | R...324 | 57.11.3333 | 33 KOhm | 2%, 0.25W, MF | |
| | R...327 | 57.11.3103 | 10 KOhm | 2%, 0.25W, MF | |
| | R...328 | 57.11.3103 | 10 KOhm | 2%, 0.25W, MF | |
| | R...329 | 57.11.3103 | 10 KOhm | 2%, 0.25W, MF | |
| | R...330 | 57.11.3103 | 10 KOhm | 2%, 0.25W, MF | |
| | R...331 | 57.11.3103 | 10 KOhm | 2%, 0.25W, MF | |
| | R...332 | 57.11.3103 | 10 KOhm | 2%, 0.25W, MF | |
| | R...333 | 57.11.3104 | 100 KOhm | 2%, 0.25W, MF | |
| | R...334 | 57.11.3124 | 120 KOhm | 2%, 0.25W, MF | |
| | R...335 | 57.11.3392 | 3.9 KOhm | 2%, 0.25W, MF | |



| IND. | POS.NO. | PART NO. | VALUE | SPECIFICATIONS / EQUIVALENT | MANUF. |
|---|---|---|---|---|---|
| | R...336 | 57.11.3223 | 22 KOhm | 2%, 0.25W, MF | |
| | R...337 | 57.11.3472 | 4.7 KOhm | 2%, 0.25W, MF | |
| | R...338 | 57.11.3163 | 16 KOhm | 2%, 0.25W, MF | |
| | R...339 | 57.11.3562 | 5.6 KOhm | 2%, 0.25W, MF | |
| | W.....1 | 1.725.240.93 | | Wiring List | |

(01) Correction of PDSLIST

Left Channel: NO. 100 ...
Right Channel: NO. 200 ...
Both Channel: NO. 300 ... , NO. 1 ...

MF=Metalfilm
Cer=Ceramic
PETP=Polyester
EL=Electrolytic

MANUFACTURER: WAKA , St=Studer , Mot=Motorola , To=Toshiba
SX=Siliconix, Ph=Philips, NS=National Semiconductors
Ha=Harris, TI=Texas Instruments, Ra=Raytheon,
Sig=Signetics

ORIG 88/01/07 (01) 88/02/22

## PREAMPLIFIER PCB 1.725.265.00 B150

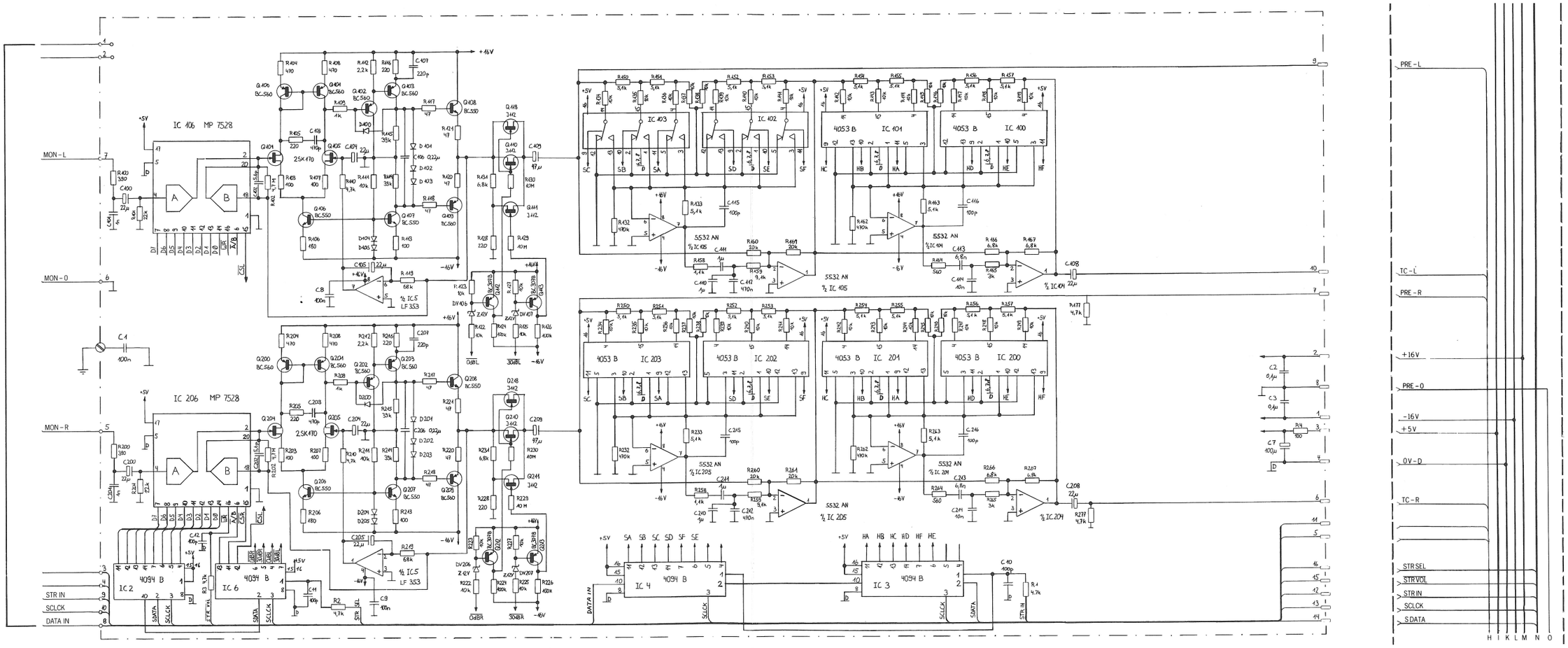


| | | | | |
|---|---|---|---|---|
| 0 02.02.88 Steigmeier | | | | |
| | AMPLIFIER B150 | | PAGE 1 OF 3 | |
| STUDER | PREAMPLIFIER | SC | 1.725.265.00 | |

## PREAMPLIFIER PCB 1.725.265.00 B150

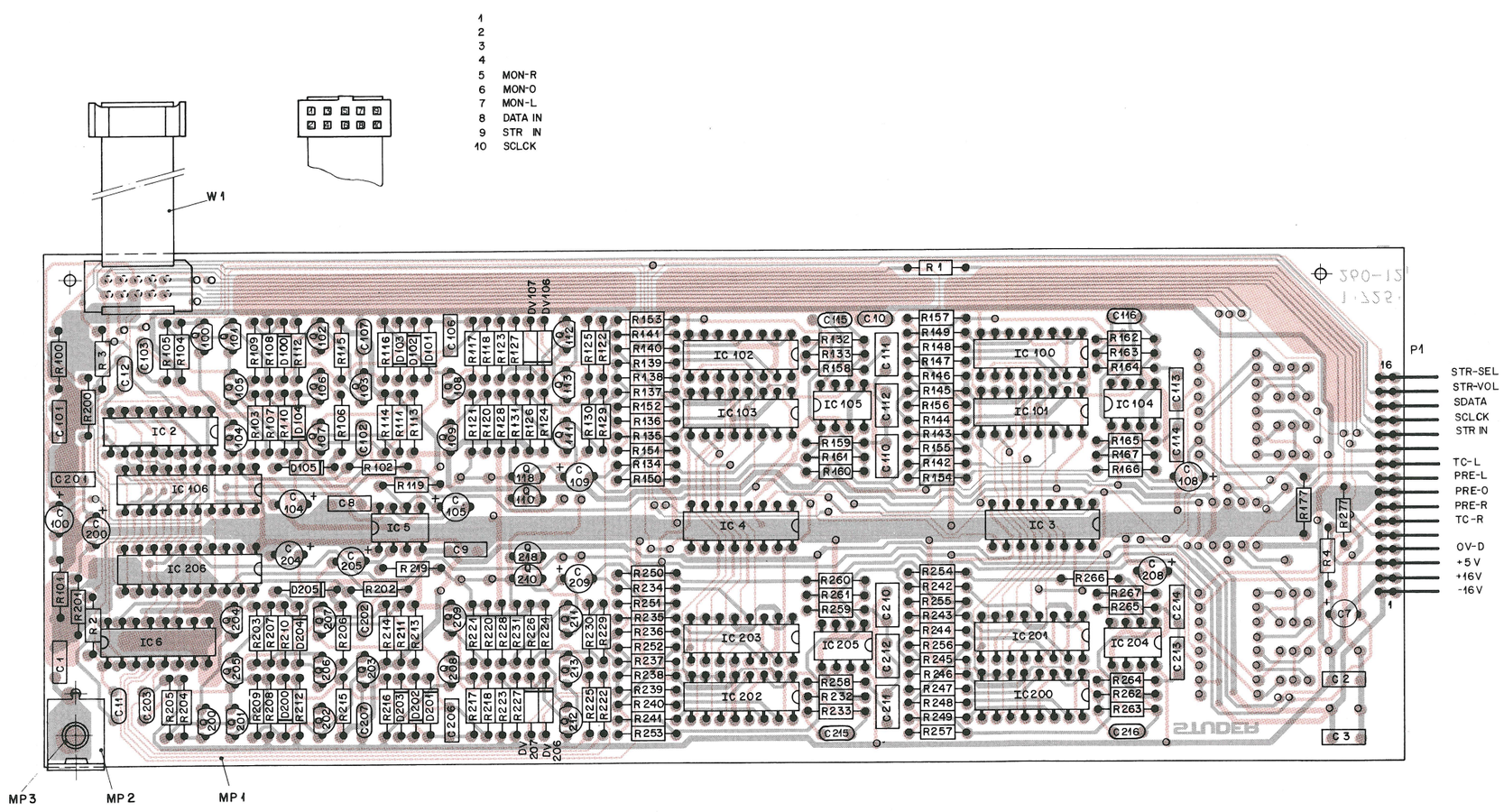


| IND. | POS.NO. | PART NO. | VALUE | SPECIFICATIONS / EQUIVALENT | MANUF. |
|---|---|---|---|---|---|
| | C.....1 | 59.06.0104 | 0.1 uF | 10%, 25V, PETP | |
| | C.....2 | 59.06.0104 | 0.1 uF | 10%, 25V, PETP | |
| | C.....3 | 59.06.0104 | 0.1 uF | 10%, 25V, PETP | |
| | C.....7 | 59.22.3101 | 100 uF | -20%, 10V, EL | |
| | C.....8 | 59.06.0104 | 0.1 uF | 10%, 25V, PETP | |
| | C.....9 | 59.06.0104 | 0.1 uF | 10%, 25V, PETP | |
| | C....10 | 59.34.4101 | 100 pF | 10%, 25V, Cer | |
| | C....11 | 59.34.4101 | 100 pF | 10%, 25V, Cer | |
| | C....12 | 59.34.4101 | 100 pF | 10%, 25V, Cer | |
| | C....100 | 59.22.5220 | 22 uF | -20%, 10V, EL | |
| | C....101 | 59.06.0102 | 1 nF | 10%, 25V, PETP | |
| | C....102 | 59.34.0569 | 5.6 pF | 10%, 25V, Cer | |
| | C....103 | 59.34.5471 | 470 pF | 10%, 25V, Cer | |
| | C....104 | 59.22.5220 | 22 uF | -20%, 25V, EL | |
| | C....105 | 59.22.5220 | 22 uF | -20%, 25V, EL | |
| | C....106 | 59.06.0224 | 220 nF | 10%, 25V, PETP | |
| | C....107 | 59.34.4221 | 220 pF | 10%, 25V, Cer | |
| | C....108 | 59.22.5220 | 22 uF | -20%, 10V, EL | |
| | C....109 | 59.22.3470 | 47 uF | -20%, 10V, EL | |
| | C....110 | 59.06.5105 | 1 uF | 5%, 25V, PETP | |
| | C....111 | 59.06.5105 | 1 uF | 5%, 25V, PETP | |
| | C....112 | 59.06.5474 | 470 nF | 5%, 25V, PETP | |
| | C....113 | 59.06.5682 | 6.8 nF | 5%, 25V, PETP | |
| | C....114 | 59.06.5103 | 10 nF | 5%, 25V, PETP | |
| | C....115 | 59.34.4101 | 100 pF | 10%, 25V, Cer | |
| | C....116 | 59.34.4101 | 100 pF | 10%, 25V, Cer | |
| | C....200 | 59.22.5220 | 22 uF | -20%, 10V, EL | |
| | C....201 | 59.06.0102 | 1 nF | 10%, 25V, PETP | |
| | C....202 | 59.34.0569 | 5.6 pF | 10%, 25V, Cer | |
| | C....203 | 59.34.5471 | 470 pF | 10%, 25V, Cer | |
| | C....204 | 59.22.5220 | 22 uF | -20%, 25V, EL | |
| | C....205 | 59.22.5220 | 22 uF | -20%, 25V, EL | |
| | C....206 | 59.06.0224 | 220 nF | 10%, 25V, PETP | |
| | C....207 | 59.34.4221 | 220 pF | 10%, 25V, Cer | |
| | C....208 | 59.22.5220 | 22 uF | -20%, 10V, EL | |
| | C....209 | 59.22.3470 | 47 uF | -20%, 10V, EL | |
| | C....210 | 59.06.5105 | 1 uF | 5%, 25V, PETP | |



| IND. | POS.NO. | PART NO. | VALUE | SPECIFICATIONS / EQUIVALENT | MANUF. |
|---|---|---|---|---|---|
| | C....211 | 59.06.5105 | 1 uF | 5%, 25V, PETP | |
| | C....212 | 59.06.5474 | 470 nF | 5%, 25V, PETP | |
| | C....213 | 59.06.5682 | 6.8 nF | 5%, 25V, PETP | |
| | C....214 | 59.06.5103 | 10 nF | 5%, 25V, PETP | |
| | C....215 | 59.34.4101 | 100 pF | 10%, 25V, Cer | |
| | C....216 | 59.34.4101 | 100 pF | 10%, 25V, Cer | |
| | D...100 | 50.04.0125 | 1N 4448 | | |
| | D...101 | 50.04.0125 | 1N 4448 | | |
| | D...102 | 50.04.0125 | 1N 4448 | | |
| | D...103 | 50.04.0125 | 1N 4448 | | |
| | D...104 | 50.04.0125 | 1N 4448 | | |
| | D...105 | 50.04.0125 | 1N 4448 | | |
| | D...200 | 50.04.0125 | 1N 4448 | | |
| | D...201 | 50.04.0125 | 1N 4448 | | |
| | D...202 | 50.04.0125 | 1N 4448 | | |
| | D...203 | 50.04.0125 | 1N 4448 | | |
| | D...204 | 50.04.0125 | 1N 4448 | | |
| | D...205 | 50.04.0125 | 1N 4448 | | |
| | DV..106 | 50.04.1117 | Z 12 V | 5%, 0.4 W | |
| | DV..107 | 50.04.1117 | Z 12 V | 5%, 0.4 W | |
| | DV..206 | 50.04.1117 | Z 12 V | 5%, 0.4 W | |
| | DV..207 | 50.04.1117 | Z 12 V | 5%, 0.4 W | |
| | IC....2 | 50.07.0018 | MC 14094B | HEF 4094B | Mot,Ph |
| | IC....3 | 50.07.0018 | MC 14094B | HEF 4094B | Mot,Ph |
| | IC....4 | 50.07.0018 | MC 14094B | HEF 4094B | Mot,Ph |
| | IC....5 | 50.09.0101 | TL 072ACP | LF 353 | TI,NS |
| | IC....6 | 50.07.0018 | MC 14094B | HEF 4094B | Mot,Ph |
| | IC..100 | 50.07.0015 | MC 14053B | HEF 4053B | Mot,Ph |
| | IC..101 | 50.07.0015 | MC 14053B | HEF 4053B | Mot,Ph |
| | IC..102 | 50.07.0015 | MC 14053B | HEF 4053B | Mot,Ph |
| | IC..103 | 50.07.0015 | MC 14053B | HEF 4053B | Mot,Ph |
| | IC..104 | 50.39.0106 | NE 5532AN | OP-AMP Dual ,Low Noise | Sig |
| | IC..105 | 50.39.0106 | NE 5532AN | OP-AMP Dual ,Low Noise | Sig |
| | IC..106 | 50.37.0037 | AD 7528JN | | ADI |



| IND. | POS.NO. | PART NO. | VALUE | SPECIFICATIONS / EQUIVALENT | MANUF. |
|---|---|---|---|---|---|
| | IC..200 | 50.07.0015 | MC 14053B | HEF 4053B | Mot,Ph |
| | IC..201 | 50.07.0015 | MC 14053B | HEF 4053B | Mot,Ph |
| | IC..202 | 50.07.0015 | MC 14053B | HEF 4053B | Mot,Ph |
| | IC..203 | 50.07.0015 | MC 14053B | HEF 4053B | Mot,Ph |
| | IC..204 | 50.39.0106 | NE 5532AN | OP-AMP Dual ,Low Noise | Sig |
| | IC..205 | 50.39.0106 | NE 5532AN | OP-AMP Dual ,Low Noise | Sig |
| | IC..206 | 50.37.0037 | AD 7528JN | | ADI |
| | MP....1 | 1.725.260.12 | | Preamplifier PCB | |
| | MP....2 | 1.726.780.01 | | Holder | |
| | MP....3 | 28.21.1450 | | Tubular Rivet | |
| | P.....1 | 54.31.0276 | 16-POLE | Plug Assembly CIS | |
| | Q...100 | 50.03.0496 | BC 560 | PNP | Sie |
| | Q...101 | 50.03.0496 | BC 560 | PNP | Sie |
| | Q...102 | 50.03.0496 | BC 560 | PNP | Sie |
| | Q...103 | 50.03.0496 | BC 560 | PNP | Sie |
| | Q...104 | 50.03.0215 | SK 170 | FET | TO |
| | Q...105 | 50.03.0215 | SK 170 | FET | TO |
| | Q...106 | 50.03.0497 | BC 550 | NPN | Sie |
| | Q...107 | 50.03.0497 | BC 550 | NPN | Sie |
| | Q...108 | 50.03.0497 | BC 550 | NPN | Sie |
| | Q...109 | 50.03.0496 | BC 560 | PNP | Sie |
| | Q...110 | 50.03.0350 | J 112 | FET | Mot |
| | Q...111 | 50.03.0350 | J 112 | FET | Mot |
| | Q...112 | 50.03.0515 | BC 307B | PNP | ITT |
| | Q...113 | 50.03.0515 | BC 307B | PNP | ITT |
| | Q...114 | 50.03.0350 | J 112 | FET | Mot |
| | Q...200 | 50.03.0496 | BC 560 | PNP | Sie |
| | Q...201 | 50.03.0496 | BC 560 | PNP | Sie |
| | Q...202 | 50.03.0496 | BC 560 | PNP | Sie |
| | Q...203 | 50.03.0496 | BC 560 | PNP | Sie |
| | Q...204 | 50.03.0215 | SK 170 | FET | TO |
| | Q...205 | 50.03.0215 | SK 170 | FET | TO |
| | Q...206 | 50.03.0497 | BC 550 | NPN | Sie |
| | Q...207 | 50.03.0497 | BC 550 | NPN | Sie |

# PREAMPLIFIER PCB 1.725.265.00 B150

| IND. | POS.NO. | PART NO. | VALUE | SPECIFICATIONS / EQUIVALENT | MANUF. |
|---|---|---|---|---|---|
| | Q...208 | 50.03.0497 | BC 550 | NPN | Sie |
| | Q...209 | 50.03.0496 | BC 560 | PNP | Sie |
| | Q...210 | 50.03.0350 | J 112 | FET | Mot |
| | Q...211 | 50.03.0350 | J 112 | FET | Mot |
| | Q...212 | 50.03.0515 | BC 307B | PNP | ITT |
| | Q...213 | 50.03.0515 | BC 307B | PNP | ITT |
| | Q...218 | 50.03.0350 | J 112 | FET | Mot |
| | R.....1 | 57.11.3472 | 4.7 KOhm | 2%, 0.25W, MF | |
| | R.....2 | 57.11.3472 | 4.7 KOhm | 2%, 0.25W, MF | |
| | R.....3 | 57.11.3472 | 4.7 KOhm | 2%, 0.25W, MF | |
| | R.....4 | 57.11.3101 | 100 Ohm | 2%, 0.25W, MF | |
| | R...100 | 57.11.3391 | 390 Ohm | 2%, 0.25W, MF | |
| | R...101 | 57.11.3223 | 22 KOhm | 2%, 0.25W, MF | |
| | R...102 | 57.11.5475 | 4.7 MOhm | 5%, 0.25W, CF | |
| | R...103 | 57.11.3101 | 100 Ohm | 2%, 0.25W, MF | |
| | R...104 | 57.11.3471 | 470 Ohm | 2%, 0.25W, MF | |
| | R...105 | 57.11.3221 | 220 Ohm | 2%, 0.25W, MF | |
| | R...106 | 57.11.3181 | 180 Ohm | 2%, 0.25W, MF | |
| | R...107 | 57.11.3101 | 100 Ohm | 2%, 0.25W, MF | |
| | R...108 | 57.11.3471 | 470 Ohm | 2%, 0.25W, MF | |
| | R...109 | 57.11.3102 | 1 KOhm | 2%, 0.25W, MF | |
| | R...110 | 57.11.3472 | 4.7 KOhm | 2%, 0.25W, MF | |
| | R...111 | 57.11.3103 | 10 KOhm | 2%, 0.25W, MF | |
| | R...112 | 57.11.3222 | 2.2 KOhm | 2%, 0.25W, MF | |
| | R...113 | 57.11.3101 | 100 Ohm | 2%, 0.25W, MF | |
| | R...114 | 57.11.3393 | 39 KOhm | 2%, 0.25W, MF | |
| | R...115 | 57.11.3393 | 39 KOhm | 2%, 0.25W, MF | |
| | R...116 | 57.11.3221 | 220 Ohm | 2%, 0.25W, MF | |
| | R...117 | 57.11.3470 | 47 Ohm | 2%, 0.25W, MF | |
| | R...118 | 57.11.3470 | 47 Ohm | 2%, 0.25W, MF | |
| | R...119 | 57.11.3683 | 68 KOhm | 2%, 0.25W, MF | |
| | R...120 | 57.11.3470 | 47 Ohm | 2%, 0.25W, MF | |
| | R...121 | 57.11.3470 | 47 Ohm | 2%, 0.25W, MF | |
| | R...122 | 57.11.3103 | 10 KOhm | 2%, 0.25W, MF | |
| | R...123 | 57.11.3103 | 10 KOhm | 2%, 0.25W, MF | |
| | R...124 | 57.11.3104 | 100 KOhm | 2%, 0.25W, MF | |



| IND. | POS.NO. | PART NO. | VALUE | SPECIFICATIONS / EQUIVALENT | MANUF. |
|---|---|---|---|---|---|
| | R...125 | 57.11.3103 | 10 KOhm | 2%, 0.25W, MF | |
| | R...126 | 57.11.3104 | 100 KOhm | 2%, 0.25W, MF | |
| | R...127 | 57.11.3103 | 10 KOhm | 2%, 0.25W, MF | |
| | R...128 | 57.11.3221 | 220 Ohm | 2%, 0.25W, MF | |
| | R...129 | 57.11.5106 | 10 MOhm | 5%, 0.25W, CF | |
| | R...130 | 57.11.5106 | 10 MOhm | 5%, 0.25W, CF | |
| | R...131 | 57.11.3682 | 6.8 KOhm | 2%, 0.25W, MF | |
| | R...132 | 57.11.3474 | 470 KOhm | 2%, 0.25W, MF | |
| | R...133 | 57.11.3512 | 5.1 KOhm | 2%, 0.25W, MF | |
| | R...134 | 57.11.3103 | 10 KOhm | 2%, 0.25W, MF | |
| | R...135 | 57.11.3103 | 10 KOhm | 2%, 0.25W, MF | |
| | R...136 | 57.11.3103 | 10 KOhm | 2%, 0.25W, MF | |
| | R...137 | 57.11.3103 | 10 KOhm | 2%, 0.25W, MF | |
| | R...138 | 57.11.3103 | 10 KOhm | 2%, 0.25W, MF | |
| | R...139 | 57.11.3103 | 10 KOhm | 2%, 0.25W, MF | |
| | R...140 | 57.11.3103 | 10 KOhm | 2%, 0.25W, MF | |
| | R...141 | 57.11.3103 | 10 KOhm | 2%, 0.25W, MF | |
| | R...142 | 57.11.3103 | 10 KOhm | 2%, 0.25W, MF | |
| | R...143 | 57.11.3103 | 10 KOhm | 2%, 0.25W, MF | |
| | R...144 | 57.11.3103 | 10 KOhm | 2%, 0.25W, MF | |
| | R...145 | 57.11.3103 | 10 KOhm | 2%, 0.25W, MF | |
| | R...146 | 57.11.3103 | 10 KOhm | 2%, 0.25W, MF | |
| | R...147 | 57.11.3103 | 10 KOhm | 2%, 0.25W, MF | |
| | R...148 | 57.11.3103 | 10 KOhm | 2%, 0.25W, MF | |
| | R...149 | 57.11.3103 | 10 KOhm | 2%, 0.25W, MF | |
| | R...150 | 57.11.3512 | 5.1 KOhm | 2%, 0.25W, MF | |
| | R...151 | 57.11.3512 | 5.1 KOhm | 2%, 0.25W, MF | |
| | R...152 | 57.11.3512 | 5.1 KOhm | 2%, 0.25W, MF | |
| | R...153 | 57.11.3512 | 5.1 KOhm | 2%, 0.25W, MF | |
| | R...154 | 57.11.3512 | 5.1 KOhm | 2%, 0.25W, MF | |
| | R...155 | 57.11.3512 | 5.1 KOhm | 2%, 0.25W, MF | |
| | R...156 | 57.11.3512 | 5.1 KOhm | 2%, 0.25W, MF | |
| | R...157 | 57.11.3512 | 5.1 KOhm | 2%, 0.25W, MF | |
| | R...158 | 57.11.3112 | 1.1 KOhm | 2%, 0.25W, MF | |
| | R...159 | 57.11.3912 | 9.1 KOhm | 2%, 0.25W, MF | |
| | R...160 | 57.11.3203 | 20 KOhm | 2%, 0.25W, MF | |
| | R...161 | 57.11.3203 | 20 KOhm | 2%, 0.25W, MF | |



| IND. | POS.NO. | PART NO. | VALUE | SPECIFICATIONS / EQUIVALENT | MANUF. |
|---|---|---|---|---|---|
| | R...162 | 57.11.3474 | 470 KOhm | 2%, 0.25W, MF | |
| | R...163 | 57.11.3512 | 5.1 KOhm | 2%, 0.25W, MF | |
| | R...164 | 57.11.3561 | 560 Ohm | 2%, 0.25W, MF | |
| | R...165 | 57.11.3302 | 3 KOhm | 2%, 0.25W, MF | |
| | R...166 | 57.11.3682 | 6.8 KOhm | 2%, 0.25W, MF | |
| | R...167 | 57.11.3682 | 6.8 KOhm | 2%, 0.25W, MF | |
| | R...177 | 57.11.3472 | 4.7 KOhm | 2%, 0.25W, MF | |
| | R...200 | 57.11.3391 | 390 Ohm | 2%, 0.25W, MF | |
| | R...201 | 57.11.3223 | 22 KOhm | 2%, 0.25W, MF | |
| | R...202 | 57.11.5475 | 4.7 MOhm | 5%, 0.25W, CF | |
| | R...203 | 57.11.3101 | 100 Ohm | 2%, 0.25W, MF | |
| | R...204 | 57.11.3471 | 470 Ohm | 2%, 0.25W, MF | |
| | R...205 | 57.11.3221 | 220 Ohm | 2%, 0.25W, MF | |
| | R...206 | 57.11.3181 | 180 Ohm | 2%, 0.25W, MF | |
| | R...207 | 57.11.3101 | 100 Ohm | 2%, 0.25W, MF | |
| | R...208 | 57.11.3471 | 470 Ohm | 2%, 0.25W, MF | |
| | R...209 | 57.11.3102 | 1 KOhm | 2%, 0.25W, MF | |
| | R...210 | 57.11.3472 | 4.7 KOhm | 2%, 0.25W, MF | |
| | R...211 | 57.11.3103 | 10 KOhm | 2%, 0.25W, MF | |
| | R...212 | 57.11.3222 | 2.2 KOhm | 2%, 0.25W, MF | |
| | R...213 | 57.11.3101 | 100 Ohm | 2%, 0.25W, MF | |
| | R...214 | 57.11.3393 | 39 KOhm | 2%, 0.25W, MF | |
| | R...215 | 57.11.3393 | 39 KOhm | 2%, 0.25W, MF | |
| | R...216 | 57.11.3221 | 220 Ohm | 2%, 0.25W, MF | |
| | R...217 | 57.11.3470 | 47 Ohm | 2%, 0.25W, MF | |
| | R...218 | 57.11.3470 | 47 Ohm | 2%, 0.25W, MF | |
| | R...219 | 57.11.3683 | 68 KOhm | 2%, 0.25W, MF | |
| | R...220 | 57.11.3470 | 47 Ohm | 2%, 0.25W, MF | |
| | R...221 | 57.11.3470 | 47 Ohm | 2%, 0.25W, MF | |
| | R...222 | 57.11.3103 | 10 KOhm | 2%, 0.25W, MF | |
| | R...223 | 57.11.3103 | 10 KOhm | 2%, 0.25W, MF | |
| | R...224 | 57.11.3104 | 100 KOhm | 2%, 0.25W, MF | |
| | R...225 | 57.11.3103 | 10 KOhm | 2%, 0.25W, MF | |
| | R...226 | 57.11.3104 | 100 KOhm | 2%, 0.25W, MF | |
| | R...227 | 57.11.3103 | 10 KOhm | 2%, 0.25W, MF | |
| | R...228 | 57.11.3221 | 220 Ohm | 2%, 0.25W, MF | |
| | R...229 | 57.11.5106 | 10 MOhm | 5%, 0.25W, CF | |



| IND. | POS.NO. | PART NO. | VALUE | SPECIFICATIONS / EQUIVALENT | MANUF. |
|---|---|---|---|---|---|
| | R...230 | 57.11.5106 | 10 MOhm | 5%, 0.25W, CF | |
| | R...231 | 57.11.3682 | 6.8 KOhm | 2%, 0.25W, MF | |
| | R...232 | 57.11.3474 | 470 KOhm | 2%, 0.25W, MF | |
| | R...233 | 57.11.3512 | 5.1 KOhm | 2%, 0.25W, MF | |
| | R...234 | 57.11.3103 | 10 KOhm | 2%, 0.25W, MF | |
| | R...235 | 57.11.3103 | 10 KOhm | 2%, 0.25W, MF | |
| | R...236 | 57.11.3103 | 10 KOhm | 2%, 0.25W, MF | |
| | R...237 | 57.11.3103 | 10 KOhm | 2%, 0.25W, MF | |
| | R...238 | 57.11.3103 | 10 KOhm | 2%, 0.25W, MF | |
| | R...239 | 57.11.3103 | 10 KOhm | 2%, 0.25W, MF | |
| | R...240 | 57.11.3103 | 10 KOhm | 2%, 0.25W, MF | |
| | R...241 | 57.11.3103 | 10 KOhm | 2%, 0.25W, MF | |
| | R...242 | 57.11.3103 | 10 KOhm | 2%, 0.25W, MF | |
| | R...243 | 57.11.3103 | 10 KOhm | 2%, 0.25W, MF | |
| | R...244 | 57.11.3103 | 10 KOhm | 2%, 0.25W, MF | |
| | R...245 | 57.11.3103 | 10 KOhm | 2%, 0.25W, MF | |
| | R...246 | 57.11.3103 | 10 KOhm | 2%, 0.25W, MF | |
| | R...247 | 57.11.3103 | 10 KOhm | 2%, 0.25W, MF | |
| | R...248 | 57.11.3103 | 10 KOhm | 2%, 0.25W, MF | |
| | R...249 | 57.11.3103 | 10 KOhm | 2%, 0.25W, MF | |
| | R...250 | 57.11.3512 | 5.1 KOhm | 2%, 0.25W, MF | |
| | R...251 | 57.11.3512 | 5.1 KOhm | 2%, 0.25W, MF | |
| | R...252 | 57.11.3512 | 5.1 KOhm | 2%, 0.25W, MF | |
| | R...253 | 57.11.3512 | 5.1 KOhm | 2%, 0.25W, MF | |
| | R...254 | 57.11.3512 | 5.1 KOhm | 2%, 0.25W, MF | |
| | R...255 | 57.11.3512 | 5.1 KOhm | 2%, 0.25W, MF | |
| | R...256 | 57.11.3512 | 5.1 KOhm | 2%, 0.25W, MF | |
| | R...257 | 57.11.3512 | 5.1 KOhm | 2%, 0.25W, MF | |
| | R...258 | 57.11.3112 | 1.1 KOhm | 2%, 0.25W, MF | |
| | R...259 | 57.11.3912 | 9.1 KOhm | 2%, 0.25W, MF | |
| | R...260 | 57.11.3203 | 20 KOhm | 2%, 0.25W, MF | |
| | R...261 | 57.11.3203 | 20 KOhm | 2%, 0.25W, MF | |
| | R...262 | 57.11.3474 | 470 KOhm | 2%, 0.25W, MF | |
| | R...263 | 57.11.3512 | 5.1 KOhm | 2%, 0.25W, MF | |
| | R...264 | 57.11.3561 | 560 Ohm | 2%, 0.25W, MF | |
| | R...265 | 57.11.3302 | 3 KOhm | 2%, 0.25W, MF | |
| | R...266 | 57.11.3682 | 6.8 KOhm | 2%, 0.25W, MF | |



| IND. | POS.NO. | PART NO. | VALUE | SPECIFICATIONS / EQUIVALENT | MANUF. |
|---|---|---|---|---|---|
| | R...267 | 57.11.3682 | 6.8 KOhm | 2%, 0.25W, MF | |
| | R...277 | 57.11.3472 | 4.7 KOhm | 2%, 0.25W, MF | |
| | W.....1 | 1.523.110.06 | 10-POLE | Flat Cable | |

Both Channels: 1.....
Left Channel: 100.....
Right Channel: 200.....

EL=Electrolytic, Cer=Ceramic, PETP=Polyester
MF=Metal Film, CF=Carbon Film

MANUFACTURER: Ad=Analog Devices, NS=NationalSemiconductors
Ph=Philips, Mot=Motorola, TI=Texas Instruments, TO=Toshiba

ORIG 88/01/07

## POWER AMPLIFIER 1.725.275.00 B150

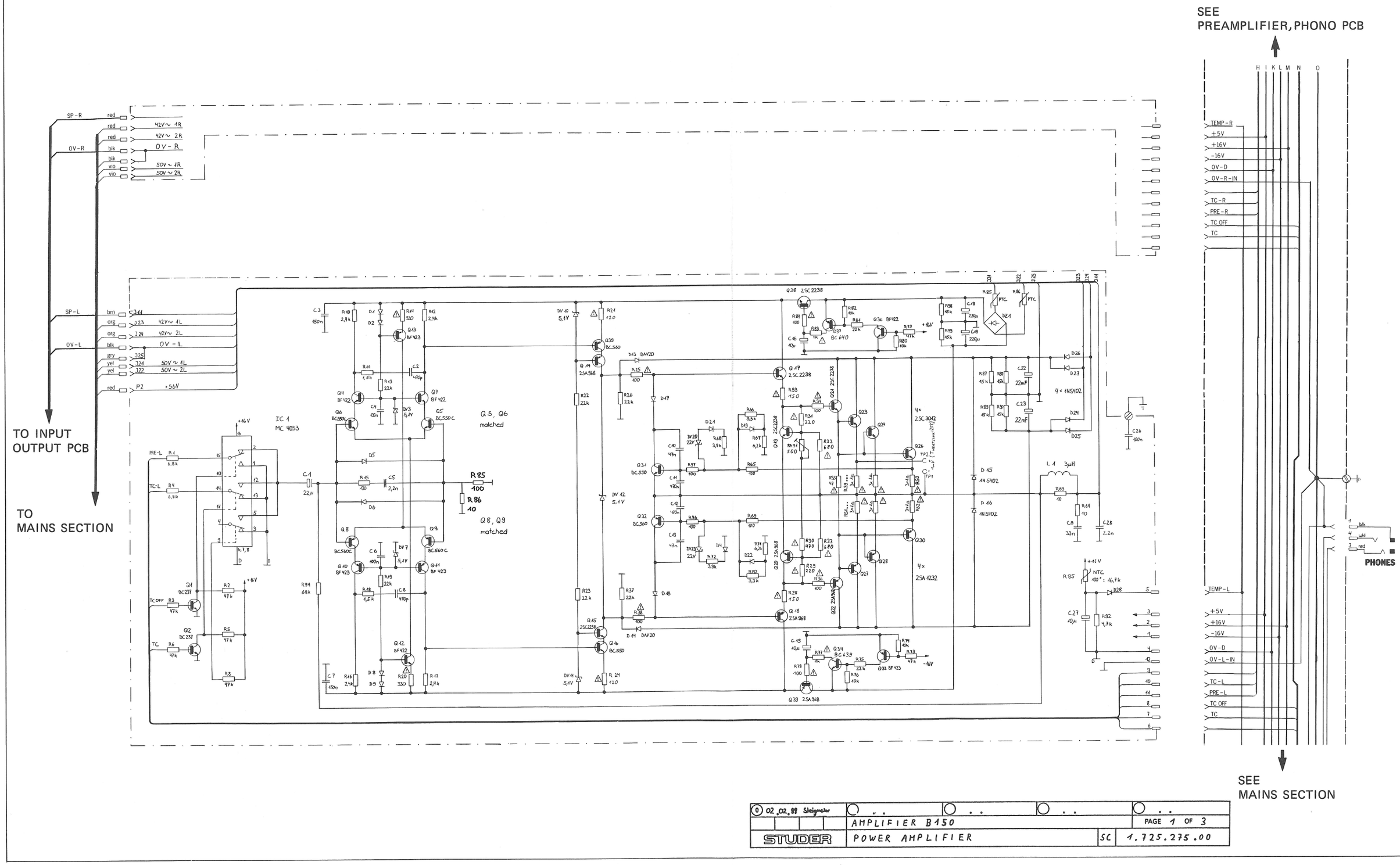


| | | | |
|---|---|---|---|
| 0 02.02.89 Steigmeier | . . | . . | . . |
| | AMPLIFIER B150 | | PAGE 1 OF 3 |
| STUDER | POWER AMPLIFIER | SC | 1.725.275.00 |

## POWER AMPLIFIER 1.725.275.00 B150

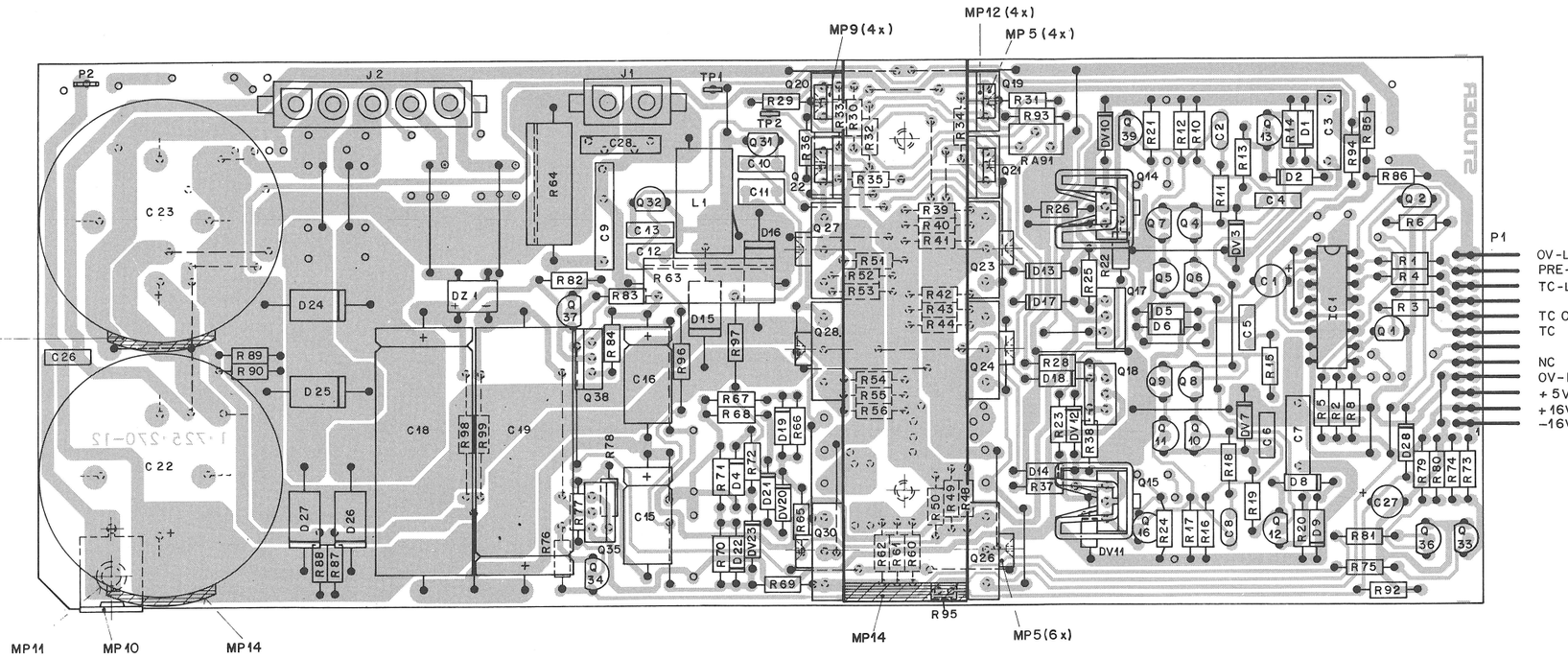


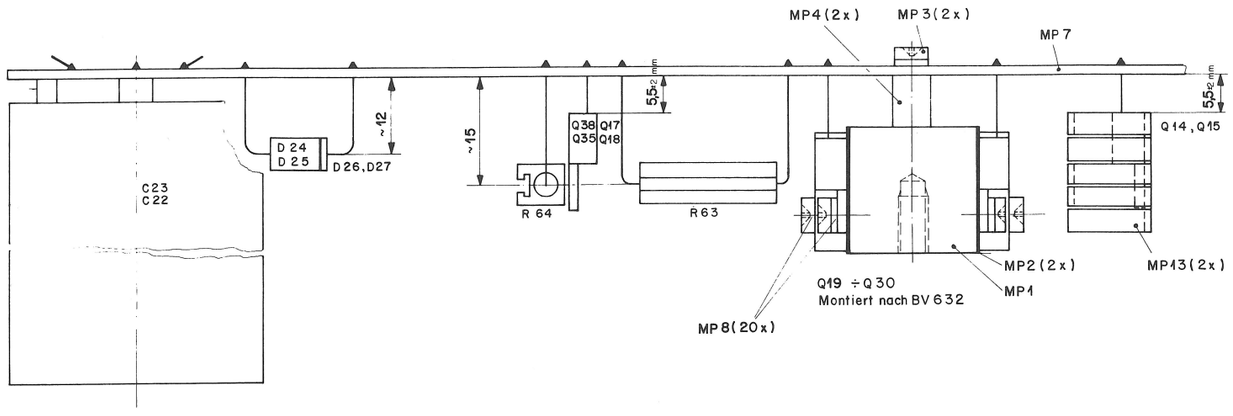


| IND. | POS.NO. | PART NO. | VALUE | SPECIFICATIONS / EQUIVALENT | MANUF. |
|---|---|---|---|---|---|
| | C...001 | 59.22.5220 | 22 uF | -10% + 10V + EL | |
| | C...002 | 59.34.5471 | 470 pF | 5% + 63V + CER | |
| | C...003 | 59.02.2154 | 150 nF | 10% + 100V + PETP/PME | |
| | C...004 | 59.06.0104 | 100 nF | 10% + 63V + PETP | |
| | C...005 | 59.06.5222 | 2.2 nF | 5% + 63V + PETP | |
| | C...006 | 59.06.0104 | 100 nF | 10% + 63V + PETP | |
| | C...007 | 59.02.2154 | 150 nF | 10% + 100V + PETP/PME | |
| | C...008 | 59.34.5471 | 470 pF | 5% + 63V + CER | |
| | C...009 | 59.05.6333 | 33 nF | 10% + 400V + PP | |
| | C...010 | 59.06.0473 | 47 nF | 10% + 63V + PETP | |
| | C...011 | 59.36.0474 | 470 nF | 10% + 63V + PETP | |
| | C...012 | 59.06.0474 | 470 nF | 10% + 63V + PETP | |
| | C...013 | 59.06.0473 | 47 nF | 10% + 63V + PETP | |
| | C...015 | 59.25.7100 | 10 uF | -10% + 100V + EL | |
| | C...016 | 59.25.7100 | 10 uF | -10% + 100V + EL | |
| | C...018 | 59.25.7221 | 220 uF | -10% + 100V + EL | |
| | C...019 | 59.25.7221 | 220 uF | -10% + 100V + EL | |
| | C...022 | 59.35.6153 | 15 mF | -20% + 63V + EL | |
| | C...023 | 59.35.6153 | 15 mF | -20% + 63V + EL | |
| | C...026 | 59.06.0104 | 100 nF | 10% + 63V + PETP | |
| | C...027 | 59.22.6100 | 10 uF | -10% + 35V + EL | |
| | C...028 | 59.05.6222 | 2.2 nF | 10% + 160V + PP | |
| | D...001 | 50.04.0125 | 1N4448 | | any |
| | D...002 | 50.04.0125 | 1N4448 | | any |
| | D...004 | 50.04.0133 | BAV 20 | Ur=120V | Ph |
| | D...005 | 50.04.0125 | 1N4448 | | any |
| | D...006 | 50.04.0125 | 1N4448 | | any |
| | D...008 | 50.04.0125 | 1N4448 | | any |
| | D...009 | 50.04.0125 | 1N4448 | | any |
| | D...013 | 50.04.0133 | BAV 20 | Ur=120V | Ph |
| | D...014 | 50.04.0133 | BAV 20 | Ur=120V | Ph |
| | D...015 | 50.04.0105 | 1N4004 | | Mot |
| | D...016 | 50.04.0105 | 1N4004 | | Mot |
| | D...017 | 50.04.0125 | 1N4448 | | any |
| | D...018 | 50.04.0125 | 1N4448 | | any |
| | D...019 | 50.04.0133 | BAV 20 | Ur=120V | Ph |

S T U D E R (00) 88/01/11 SP POWER AMPLIFIER "ESE" PL 1.725.275.00 PAGE 1

| IND. | POS.NO. | PART NO. | VALUE | SPECIFICATIONS / EQUIVALENT | MANUF. |
|---|---|---|---|---|---|
| | D...021 | 50.04.0133 | BAV 20 | Ur=120V | Ph |
| | D...022 | 50.04.0133 | BAV 20 | Ur=120V | Ph |
| | D...024 | 50.04.0507 | 1N5402 | 200 V, 3 A+/ MR 502 | Mot |
| | D...025 | 50.04.0507 | 1N5402 | 200 V, 3 A+/ MR 502 | Mot |
| | D...026 | 50.04.0507 | 1N5402 | 200 V, 3 A+/ MR 502 | Mot |
| | D...027 | 50.04.0507 | 1N5402 | 200 V, 3 A+/ MR 502 | Mot |
| | D...028 | 50.04.0125 | 1N4448 | | any |
| | DV..003 | 50.04.1112 | 5,1 V | Z, 400 mW | any |
| | DV..007 | 50.04.1112 | 5,1 V | Z, 400 mW | any |
| | DV..010 | 50.04.1112 | 5,1 V | Z, 400 mW | any |
| | DV..011 | 50.04.1112 | 5,1 V | Z, 400 mW | any |
| | DV..012 | 50.04.1112 | 5,1 V | Z, 400 mW | any |
| | DV..020 | 50.04.1116 | 22 V | Z, 400 mW | any |
| | DV..023 | 50.04.1116 | 22 V | Z, 400 mW | any |
| | DZ..001 | 70.01.0217 | DF 04M | 400 V, 1 A | |
| | IC..001 | 50.07.0015 | MC14053 | Triple 2Chn. Analog Mpx. | Mot |
| | J...001 | 54.25.0002 | 2 pole | Power Connector | |
| | J...002 | 54.25.0005 | 5 pole | Power Connector | |
| | L...001 | 1.728.320.25 | 3.0uH | Output Coil | St |
| | MP..001 | 1.725.270.01 | 1 pcs | Cooling Block | |
| | MP..002 | 1.725.270.02 | 2 pcs | Thermoplastic Foil | |
| | MP..003 | 21.38.1372 | 2 pcs | Screw M3*16 Rustless | |
| | MP..004 | 1.010.503.27 | 2 pcs | Distance Holder | |
| | MP..005 | 21.26.0357 | 10 pcs | Screw M3*12 | |
| | MP..007 | 1.725.270.12 | 1 pcs | Power Amp.PCB | |
| | MP..008 | 37.01.0101 | 20 pcs | Spring Washer | |
| | MP..009 | 1.010.098.27 | 4 pcs | Washer | |
| | MP..010 | 1.726.780.01 | 1 pcs | Holder | |
| | MP..011 | 28.21.1450 | 1 pcs | Tubular Rivet | |
| | MP..012 | 50.20.0404 | 4 pcs | Insulating Bush | |
| | MP..013 | 50.20.3004 | 2 pcs | Heatsink | |

S T U D E R (00) 88/01/11 SP POWER AMPLIFIER "ESE" PL 1.725.275.00 PAGE 2

| IND. | POS.NO. | PART NO. | VALUE | SPECIFICATIONS / EQUIVALENT | MANUF. |
|---|---|---|---|---|---|
| | MP..014 | 1.725.270.03 | 3 pcs | foam rubber | |
| | P...001 | 54.01.0221 | 12 pole | CIS | |
| | P...002 | 54.02.0320 | | | |
| | Q...001 | 50.03.0436 | BC 237B | NPN | Sie |
| | Q...002 | 50.03.0436 | BC 237B | NPN | Sie |
| | Q...004 | 50.03.0553 | BF 422 | NPN Vceo>160V | Ph |
| | Q...005 | 1.010.039.50 | BC 550C | NPN Matched with Q6 | St |
| | Q...006 | 1.010.039.50 | BC 550C | NPN Matched with Q5 | St |
| | Q...007 | 50.03.0553 | BF 422 | NPN Vceo>160V | Ph |
| | Q...008 | 1.010.038.50 | BC 560C | PNP Matched with Q9 | St |
| | Q...009 | 1.010.038.50 | BC 560C | PNP Matched with Q8 | St |
| | Q...010 | 50.03.0627 | BF 423 | PNP Vceo>160V | Ph |
| | Q...011 | 50.03.0627 | BF 423 | PNP Vceo>160V | Ph |
| | Q...012 | 50.03.0553 | BF 422 | NPN Vceo>160V | Ph |
| | Q...013 | 50.03.0627 | BF 423 | PNP Vceo>160V | Ph |
| | Q...014 | 50.03.0801 | 2SA968 | PNP Vceo>160V,B>70 | To |
| | Q...015 | 50.03.0776 | 2SC2238 | NPN Vceo>160V,B>70 | To |
| | Q...016 | 50.03.0497 | BC 550 | NPN | Sie |
| | Q...017 | 50.03.0776 | 2SC2238 | NPN Vceo>160V,B>70 | To |
| | Q...018 | 50.03.0801 | 2SA968 | PNP Vceo>160V,B>70 | To |
| | Q...019 | 50.03.0776 | 2SC2238 | NPN Vceo>160V,B>70 | To |
| | Q...020 | 50.03.0801 | 2SA968 | PNP Vceo>160V,B>70 | To |
| | Q...021 | 50.03.0776 | 2SC2238 | NPN Vceo>120V,B>70 | To |
| | Q...022 | 50.03.0801 | 2SA968 | PNP Vceo>120V,B>70 | To |
| | Q...023 | 50.03.0517 | 2SC3012 | NPN | NEC |
| | Q...024 | 50.03.0517 | 2SC3012 | NPN | NEC |
| | Q...026 | 50.03.0517 | 2SC3012 | NPN | NEC |
| | Q...027 | 50.03.0518 | 2SA1232 | PNP | NEC |
| | Q...028 | 50.03.0518 | 2SA1232 | PNP | NEC |
| | Q...030 | 50.03.0518 | 2SA1232 | PNP | NEC |
| | Q...031 | 50.03.0497 | BC 550 | NPN | Sie |
| | Q...032 | 50.03.0496 | BC 560 | PNP | Sie |
| | Q...033 | 50.03.0627 | BF 423 | PNP Vceo>120V | Ph |
| | Q...034 | 50.03.0551 | BC 639 | NPN Vceo>80V | Ph |
| | Q...035 | 50.03.0801 | 2SA968 | PNP Vceo>120V,B>70 | To |

S T U D E R (00) 88/01/11 SP POWER AMPLIFIER "ESE" PL 1.725.275.00 PAGE 3

## POWER AMPLIFIER 1.725.275.00 B150

| IND. | POS.NO. | PART NO. | VALUE | SPECIFICATIONS / EQUIVALENT | MANUF. |
|---|---|---|---|---|---|
| | Q...036 | 50.03.0553 | BF 422 | PNP Vceo>120V | Ph |
| | Q...037 | 50.03.0626 | BC 640 | PNP Vceo>80V | Ph |
| | Q...038 | 50.03.0776 | 2SC2238 | NPN Vceo>120V,B>70 | To |
| | Q...039 | 50.03.0496 | BC 560 | PNP | Sie |
| | R...001 | 57.11.3682 | 6.8 kOhm | 2% , 0.25W , MF | |
| | R...002 | 57.11.3473 | 47 kOhm | 2% , 0.25W , MF | |
| | R...003 | 57.11.3473 | 47 kOhm | 2% , 0.25W , MF | |
| | R...004 | 57.11.3682 | 6.8 kOhm | 2% , 0.25W , MF | |
| | R...005 | 57.11.3473 | 47 kOhm | 2% , 0.25W , MF | |
| | R...006 | 57.11.3473 | 47 kOhm | 2% , 0.25W , MF | |
| | R...008 | 57.11.3473 | 47 kOhm | 2% , 0.25W , MF | |
| | R...010 | 57.11.3242 | 2.4 kOhm | 2% , 0.25W , MF | |
| | R...011 | 57.11.3152 | 1.5 kOhm | 2% , 0.25W , MF | |
| | R...012 | 57.11.3242 | 2.4 kOhm | 2% , 0.25W , MF | |
| | R...013 | 57.11.3223 | 22 kOhm | 2% , 0.25W , MF | |
| | R...014 | 57.19.0331 | 330 Ohm | 5% , 0.25W , MF | FUSIBLE RESISTOR |
| | R...015 | 57.11.3131 | 130 Ohm | 2% , 0.25W , MF | |
| | R...016 | 57.11.3242 | 2.4 kOhm | 2% , 0.25W , MF | |
| | R...017 | 57.11.3242 | 2.4 kOhm | 2% , 0.25W , MF | |
| | R...018 | 57.11.3152 | 1.5 kOhm | 2% , 0.25W , MF | |
| | R...019 | 57.11.3223 | 22 kOhm | 2% , 0.25W , MF | |
| | R...020 | 57.19.0331 | 330 Ohm | 5% , 0.25W , MF | FUSIBLE RESISTOR |
| | R...021 | 57.19.0121 | 120 Ohm | 5% , 0.25W , MF | FUSIBLE RESISTOR |
| | R...022 | 57.11.3223 | 22 kOhm | 2% , 0.25W , MF | |
| | R...023 | 57.11.3223 | 22 kOhm | 2% , 0.25W , MF | |
| | R...024 | 57.19.0121 | 120 Ohm | 5% , 0.25W , MF | FUSIBLE RESISTOR |
| | R...025 | 57.19.0101 | 100 Ohm | 5% , 0.25W , MF | FUSIBLE RESISTOR |
| | R...026 | 57.11.3223 | 22 kOhm | 2% , 0.25W , MF | |
| | R...028 | 57.19.0151 | 150 Ohm | 5% , 0.25W , MF | FUSIBLE RESISTOR |
| | R...029 | 57.19.0221 | 220 Ohm | 5% , 0.25W , MF | FUSIBLE RESISTOR |
| | R...030 | 57.19.0471 | 470 Ohm | 5% , 0.25W , MF | FUSIBLE RESISTOR |
| | R...031 | 57.19.0221 | 220 Ohm | 5% , 0.25W , MF | FUSIBLE RESISTOR |
| | R...032 | 57.19.0681 | 680 Ohm | 5% , 0.25W , MF | FUSIBLE RESISTOR |
| | R...033 | 57.19.0681 | 680 Ohm | 5% , 0.25W , MF | FUSIBLE RESISTOR |
| | R...034 | 57.19.0101 | 100 Ohm | 5% , 0.25W , MF | FUSIBLE RESISTOR |
| | R...035 | 57.19.0470 | 47 Ohm | 5% , 0.25W , MF | FUSIBLE RESISTOR |



| IND. | POS.NO. | PART NO. | VALUE | SPECIFICATIONS / EQUIVALENT | MANUF. |
|---|---|---|---|---|---|
| | R...036 | 57.19.0101 | 100 Ohm | 5% , 0.25W , MF | FUSIBLE RESISTOR |
| | R...037 | 57.11.3223 | 22 kOhm | 2% , 0.25W , MF | |
| | R...038 | 57.19.0101 | 100 Ohm | 5% , 0.25W , MF | FUSIBLE RESISTOR |
| | R...039 | 57.19.0109 | 1 Ohm | 5% , 0.25W , MF | FUSIBLE RESISTOR |
| | R...040 | 57.19.0109 | 1 Ohm | 5% , 0.25W , MF | FUSIBLE RESISTOR |
| | R...041 | 57.19.0109 | 1 Ohm | 5% , 0.25W , MF | FUSIBLE RESISTOR |
| | R...042 | 57.19.0109 | 1 Ohm | 5% , 0.25W , MF | FUSIBLE RESISTOR |
| | R...043 | 57.19.0109 | 1 Ohm | 5% , 0.25W , MF | FUSIBLE RESISTOR |
| | R...044 | 57.19.0109 | 1 Ohm | 5% , 0.25W , MF | FUSIBLE RESISTOR |
| | R...048 | 57.19.0109 | 1 Ohm | 5% , 0.25W , MF | FUSIBLE RESISTOR |
| | R...049 | 57.19.0109 | 1 Ohm | 5% , 0.25W , MF | FUSIBLE RESISTOR |
| | R...050 | 57.19.0109 | 1 Ohm | 5% , 0.25W , MF | FUSIBLE RESISTOR |
| | R...051 | 57.19.0109 | 1 Ohm | 5% , 0.25W , MF | FUSIBLE RESISTOR |
| | R...052 | 57.19.0109 | 1 Ohm | 5% , 0.25W , MF | FUSIBLE RESISTOR |
| | R...053 | 57.19.0109 | 1 Ohm | 5% , 0.25W , MF | FUSIBLE RESISTOR |
| | R...054 | 57.19.0109 | 1 Ohm | 5% , 0.25W , MF | FUSIBLE RESISTOR |
| | R...055 | 57.19.0109 | 1 Ohm | 5% , 0.25W , MF | FUSIBLE RESISTOR |
| | R...056 | 57.19.0109 | 1 Ohm | 5% , 0.25W , MF | FUSIBLE RESISTOR |
| | R...060 | 57.19.0109 | 1 Ohm | 5% , 0.25W , MF | FUSIBLE RESISTOR |
| | R...061 | 57.19.0109 | 1 Ohm | 5% , 0.25W , MF | FUSIBLE RESISTOR |
| | R...062 | 57.19.0109 | 1 Ohm | 5% , 0.25W , MF | FUSIBLE RESISTOR |
| | R...063 | 57.56.5100 | 10 Ohm | 10% , 4 W , | |
| | R...064 | 57.56.5100 | 10 Ohm | 10% , 4 W , | |
| | R...065 | 57.19.0101 | 100 Ohm | 5% , 0.25W , MF | FUSIBLE RESISTOR |
| | R...066 | 57.11.3332 | 3.3 kOhm | 2% , 0.25W , MF | |
| | R...067 | 57.11.3622 | 6.2 kOhm | 2% , 0.25W , MF | |
| | R...068 | 57.11.3392 | 3.9 kOhm | 2% , 0.25W , MF | |
| | R...069 | 57.19.0101 | 100 Ohm | 5% , 0.25W , MF | FUSIBLE RESISTOR |
| | R...070 | 57.11.3332 | 3.3 kOhm | 2% , 0.25W , MF | |
| | R...071 | 57.11.3622 | 6.2 kOhm | 2% , 0.25W , MF | |
| | R...072 | 57.11.3392 | 3.9 kOhm | 2% , 0.25W , MF | |
| | R...073 | 57.11.3473 | 47 kOhm | 2% , 0.25W , MF | |
| | R...074 | 57.11.3103 | 10 kOhm | 2% , 0.25W , MF | |
| | R...075 | 57.11.3223 | 22 kOhm | 2% , 0.25W , MF | |
| | R...076 | 57.11.3103 | 10 kOhm | 2% , 0.25W , MF | |
| | R...077 | 57.19.0102 | 1 kOhm | 5% , 0.25W , MF | FUSIBLE RESISTOR |
| | R...078 | 57.19.0101 | 100 Ohm | 5% , 0.25W , MF | FUSIBLE RESISTOR |



| IND. | POS.NO. | PART NO. | VALUE | SPECIFICATIONS / EQUIVALENT | MANUF. |
|---|---|---|---|---|---|
| | R...079 | 57.11.3473 | 47 kOhm | 2% , 0.25W , MF | |
| | R...080 | 57.11.3103 | 10 kOhm | 2% , 0.25W , MF | |
| | R...081 | 57.11.3223 | 22 kOhm | 2% , 0.25W , MF | |
| | R...082 | 57.11.3103 | 10 kOhm | 2% , 0.25W , MF | |
| | R...083 | 57.19.0102 | 1 kOhm | 5% , 0.25W , MF | FUSIBLE RESISTOR |
| | R...084 | 57.19.0101 | 100 Ohm | 5% , 0.25W , MF | FUSIBLE RESISTOR |
| | R...085 | 57.11.3101 | 100 Ohm | 2% , 0.25W , MF | |
| | R...086 | 57.11.3100 | 10 Ohm | 2% , 0.25W , MF | |
| | R...087 | 57.11.3153 | 15 kOhm | 2% , 0.25W , MF | |
| | R...088 | 57.11.3153 | 15 kOhm | 2% , 0.25W , MF | |
| | R...089 | 57.11.3153 | 15 kOhm | 2% , 0.25W , MF | |
| | R...090 | 57.11.3153 | 15 kOhm | 2% , 0.25W , MF | |
| | R...092 | 57.11.3472 | 4.7 kOhm | 2% , 0.25W , MF | |
| | R...093 | 57.19.0151 | 150 Ohm | 5% , 0.25W , MF | FUSIBLE RESISTOR |
| | R...094 | 57.11.3683 | 68 kOhm | 2% , 0.25W , MF | |
| | R...095 | 57.99.0220 | 16.7kOhm | 100 C , NTC | |
| | R...096 | 57.11.3101 | 100 Ohm | 2% , 0.25W , MF | |
| | R...097 | 57.11.3101 | 100 Ohm | 2% , 0.25W , MF | |
| | R...098 | 57.11.3153 | 15 kOhm | 2% , 0.25W , MF | |
| | R...099 | 57.11.3153 | 15 kOhm | 2% , 0.25W , MF | |
| | RA..091 | 58.01.9501 | 500 Ohm | 10% , 0.5 W , Cerm | |
| | TP..001 | 29.21.6002 | | | |
| | TP..002 | 29.21.6002 | | | |



| IND. | POS.NO. | PART NO. | VALUE | SPECIFICATIONS / EQUIVALENT | MANUF. |
|---|---|---|---|---|---|

Mf=Metalfilm
Cer=Ceramic
Petp=Polyester
El=Electrolytic
PP=Polypropylene
MANUFACTURER: Sie=Siemens , St=Studer , To=Toshiba
Mot=Motorola, Ph=Philips,

ORIG 88/01/11

## INTERCONNECTION BOARD 1.725.285.00 B150

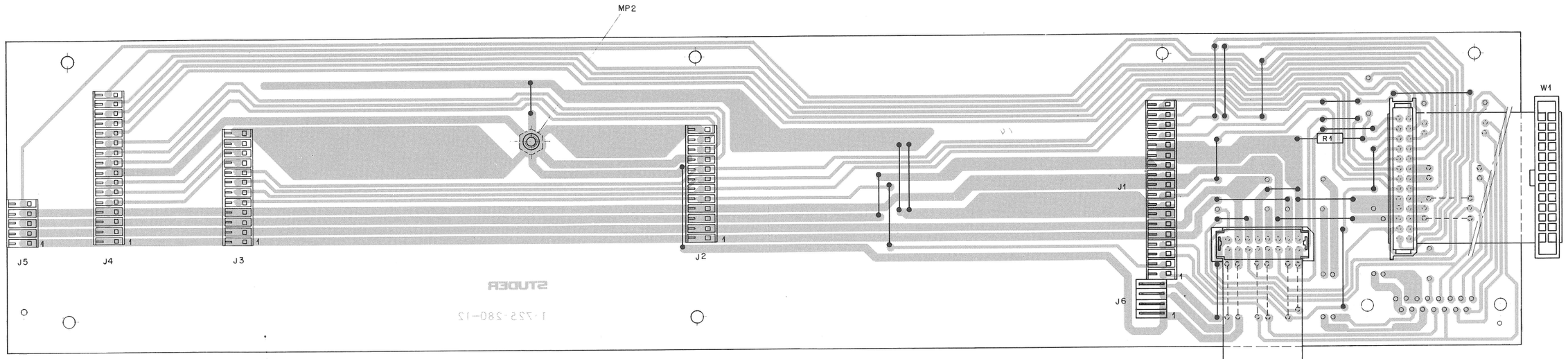


| IND. | POS.NO. | PART NO. | VALUE | SPECIFICATIONS / EQUIVALENT | MANUF. |
|---|---|---|---|---|---|
| | J.....1 | 54.01.0296 | 18-POLE | CIS SOCKET-STRIP | |
| | J.....2 | 54.01.0215 | 12-POLE | CIS SOCKET-STRIP | |
| | J.....3 | 54.01.0215 | 12-POLE | CIS SOCKET-STRIP | |
| | J.....4 | 54.01.0294 | 16-POLE | CIS SOCKET-STRIP | |
| | J.....5 | 54.01.0288 | 5-POLE | CIS SOCKET-STRIP | |
| | J.....6 | 54.01.0298 | 4-POLE | CIS SOCKET-STRIP | |
| | MP....1 | 1.725.280.12 | | INTERCONNECTION PCB | |
| | MP....2 | 1.010.013.22 | | Nut M3 | |
| | R.....1 | 57.11.3103 | 10 KOhm | 2%, 0.25W, MF | |
| | W.....1 | 1.023.312.02 | 26-POLE | Flat Cable | |
| | W.....2 | 1.023.311.04 | 16-POLE | Flat Cable | |

ORIG 88/01/07

STUDER (00) 88/01/07 SP INTERCONNECTION BOARD PL 1.725.285.00 PAGE 1

## MICROCOMPUTER PCB 1.725.295.00 B150

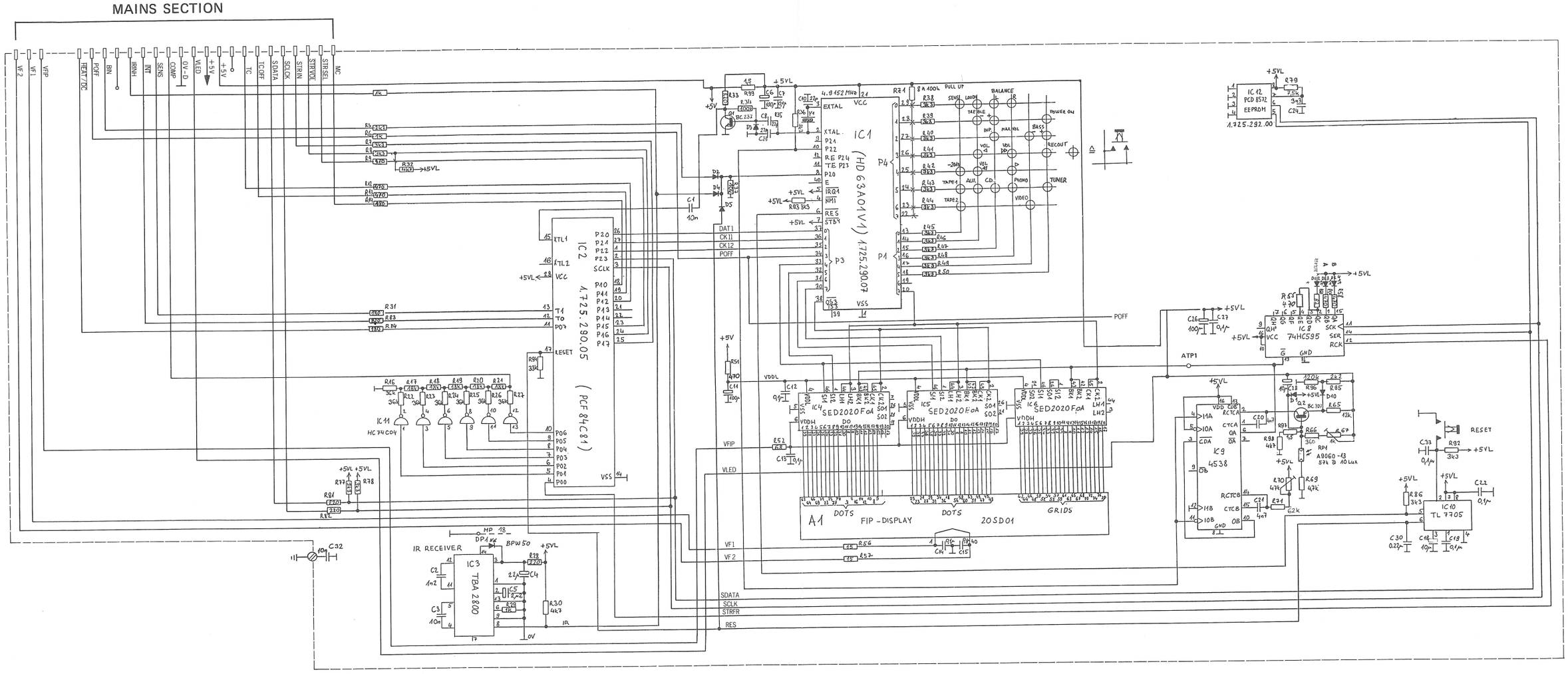


| | | | | | |
|---|---|---|---|---|---|
| 0 1.02.88 E. Hä. | | | | | |
| | POWER AMPLIFIER | B150 | | | PAGE 1 OF 3 |
| STUDER | MICROCOMPUTER BOARD | "ESE" | SC | 1.725.295-00 | |

## MICROCOMPUTER PCB 1.725.295.00 B150

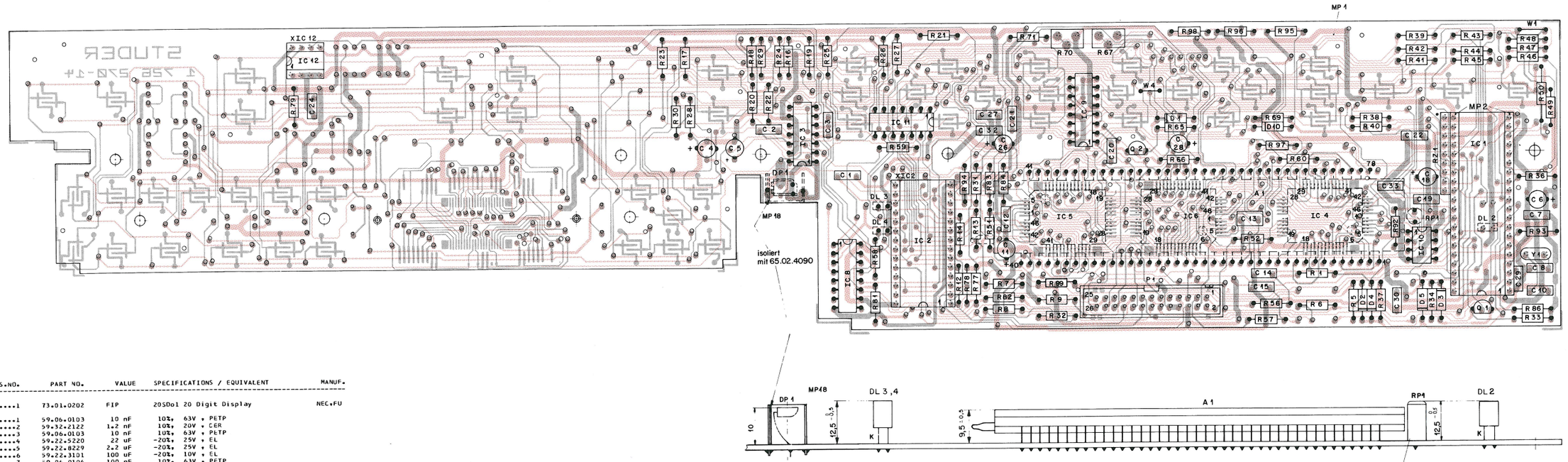


| IND. | POS.NO. | PART NO. | VALUE | SPECIFICATIONS / EQUIVALENT | MANUF. |
|---|---|---|---|---|---|
| | A.....1 | 73.01.0202 | FIP | 20SDo1 20 Digit Display | NEC,FU |
| | C.....1 | 59.06.0103 | 10 nF | 10%, 63V , PETP | |
| | C.....2 | 59.32.2122 | 1.2 nF | 10%, 20V , CER | |
| | C.....3 | 59.06.0103 | 10 nF | 10%, 63V , PETP | |
| | C.....4 | 59.22.5220 | 22 uF | -20%, 25V , EL | |
| | C.....5 | 59.22.8229 | 2.2 uF | -20%, 25V , EL | |
| | C.....6 | 59.22.3101 | 100 uF | -20%, 10V , EL | |
| | C.....7 | 59.06.0104 | 100 nF | 10%, 63V , PETP | |
| | C.....8 | 59.34.2220 | 22 pF | 10%, 40V , CER | |
| | C.....10 | 59.34.2220 | 22 pF | 10%, 40V , CER | |
| | C.....11 | 59.22.3101 | 100 uF | -20%, 10V , EL | |
| | C.....12 | 59.06.0104 | 100 nF | 10%, 63V , PETP | |
| | C.....13 | 59.06.0104 | 100 nF | 10%, 63V , PETP | |
| | C.....14 | 59.06.0104 | 100 nF | 10%, 63V , PETP | |
| | C.....15 | 59.06.0104 | 100 nF | 10%, 63V , PETP | |
| | C.....18 | 59.22.6100 | 10 uF | -20%, 10V , EL | |
| | C.....19 | 59.06.0104 | 100 nF | 10%, 63V , PETP | |
| | C.....20 | 59.06.0472 | 4.7 nF | 10%, 63V , PETP | |
| (00) | C.....21 | 59.40.0472 | 4.7 nF | 10%, 63V , PETP | |
| (01) | C.....21 | 59.06.5472 | 4.7 nF | 5%, 63V , PETP | |
| | C.....22 | 59.06.0104 | 100 nF | 10%, 63V , PETP | |
| | C.....24 | 59.06.0332 | 3.3 nF | 10%, 63V , PETP | |
| (00) | C.....25 | 59.06.0332 | 3.3 nF | 10%, 63V , PETP | |
| (01) | C.....25 | | | | |
| | C.....26 | 59.22.3101 | 100 uF | -20%, 63V , EL | |
| | C.....27 | 59.06.0104 | 100 nF | 10%, 63V , PETP | |
| | C.....28 | 59.22.6100 | 10 uF | -20%, 25V , EL | |
| | C.....29 | 59.34.2220 | 22 pF | 10%, 40V , CER | |
| | C.....30 | 59.06.0224 | 220 nF | 10%, 63V , PETP | |
| | C.....32 | 59.06.0103 | 10 nF | 10%, 63V , PETP | |
| | C.....33 | 59.06.0104 | 100 nF | 10%, 63V , PETP | |
| | D.....1 | 50.04.0125 | 1N 4448 | | Any |
| | D.....2 | 50.04.0125 | 1N 4448 | | Any |
| | D.....3 | 50.04.0125 | 1N 4448 | | Any |
| | D.....4 | 50.04.0125 | 1N 4448 | | Any |



| IND. | POS.NO. | PART NO. | VALUE | SPECIFICATIONS / EQUIVALENT | MANUF. |
|---|---|---|---|---|---|
| | D.....5 | 50.04.0125 | 1N 4448 | | Any |
| | D.....10 | 50.04.0125 | 1N 4448 | | Any |
| | DL....2 | 50.04.2701 | LED | red SPR5551 REC / MV57123 | STA/GI |
| | DL....3 | 50.04.2702 | LED | yellow SPY5551 REC / MV53123 | STA/GI |
| | DL....4 | 50.04.2702 | LED | yellow SPY5551 REC / MV53123 | STA/GI |
| | DP....1 | 50.04.2136 | 8PW 50 | | PH |
| | IC....1 | 1.725.295.07 | uP | I/O Processor B250-E CMOS | STU |
| | IC....2 | 1.725.295.05 | uP | Micro controller PCF84C80 B250-E | STU |
| | IC....3 | 50.11.0121 | TBA2800 | IR Detector | ITT |
| | IC....4 | 50.52.0001 | SED2020 | Foa FIP-Driver | SE |
| | IC....5 | 50.52.0001 | SED2020 | Foa FIP-Driver | SE |
| | IC....6 | 50.52.0001 | SED2020 | Foa FIP-Driver | SE |
| | IC....8 | 50.17.1595 | 74HC595 | 8Bit Shift reg. with output latch | DIV |
| | IC....9 | 50.07.0538 | 4538 | Dual Monoflop CMOS | DIV |
| (00) | IC....9 | 50.07.0538 | 4538 | Dual Monoflop CMOS | Ph,Mot |
| (01) | IC....9 | 50.07.1538 | 4538 | Dual Monoflop CMOS | Ph,Mot |
| | IC....10 | 50.11.0122 | TL7705 | Reset Generator | TI |
| | IC....11 | 50.17.1004 | 74HC04 | Hex Inverter | DIV |
| | IC....12 | 1.725.292.00 | PCD857Z | 1 kBit EEPROM B250-E Programmed | STU |
| | MP....1 | 1.726.270.14 | 1 PCS | MICROCOMPUTER PCB | STU |
| | MP....2 | 53.03.0228 | 40 PCS | IC Socket Pins | |
| | MP....6 | 1.726.270.03 | 1 PCS | Tube | STU |
| | MP....18 | 1.726.270.09 | 1 PCS | IR-Reflektor | STU |
| | P.....1 | 54.14.2003 | 26 Pin | Connector for Ribbon-Cable | |
| | Q.....1 | 50.03.0436 | BC237 | NPN Small signal | Any |
| | Q.....2 | 50.03.0515 | BC307 | PNP Small signal | Any |
| | R.....1 | 57.11.4102 | 1 K | 2%, 0.25W , MF | |
| | R.....5 | 57.11.4222 | 2.2 K | 2%, 0.25W , MF | |
| | R.....6 | 57.11.4102 | 1 K | 2%, 0.25W , MF | |
| | R.....7 | 57.11.4332 | 3.3 K | 2%, 0.25W , MF | |
| | R.....8 | 57.11.4332 | 3.3 K | 2%, 0.25W , MF | |



| IND. | POS.NO. | PART NO. | VALUE | SPECIFICATIONS / EQUIVALENT | MANUF. |
|---|---|---|---|---|---|
| | R.....9 | 57.11.4471 | 470 | 2%, 0.25W , MF | |
| | R.....12 | 57.11.4471 | 470 | 2%, 0.25W , MF | |
| | R.....13 | 57.11.4471 | 470 | 2%, 0.25W , MF | |
| | R.....14 | 57.11.4181 | 180 | 2%, 0.25W , MF | |
| | R.....16 | 57.11.3363 | 36 K | 1%, 0.25W , MF | |
| | R.....17 | 57.11.3183 | 18 K | 1%, 0.25W , MF | |
| | R.....18 | 57.11.3183 | 18 K | 1%, 0.25W , MF | |
| | R.....19 | 57.11.3183 | 18 K | 1%, 0.25W , MF | |
| | R.....20 | 57.11.3183 | 18 K | 1%, 0.25W , MF | |
| | R.....21 | 57.11.3183 | 18 K | 1%, 0.25W , MF | |
| | R.....22 | 57.11.3363 | 36 K | 1%, 0.25W , MF | |
| | R.....23 | 57.11.3363 | 36 K | 1%, 0.25W , MF | |
| | R.....24 | 57.11.3363 | 36 K | 1%, 0.25W , MF | |
| | R.....25 | 57.11.3363 | 36 K | 1%, 0.25W , MF | |
| | R.....26 | 57.11.3363 | 36 K | 1%, 0.25W , MF | |
| | R.....27 | 57.11.3363 | 36 K | 1%, 0.25W , MF | |
| | R.....28 | 57.11.4221 | 220 | 2%, 0.25W , MF | |
| | R.....29 | 57.11.4102 | 1 K | 2%, 0.25W , MF | |
| | R.....30 | 57.11.4472 | 4.7 K | 2%, 0.25W , MF | |
| | R.....31 | 57.11.4181 | 180 | 2%, 0.25W , MF | |
| | R.....32 | 57.11.4472 | 4.7 K | 2%, 0.25W , MF | |
| | R.....33 | 57.11.4821 | 820 | 2%, 0.25W , MF | |
| | R.....34 | 57.11.4104 | 100 K | 2%, 0.25W , MF | |
| (01) | R.....35 | 57.11.4332 | 3.3 K | 2%, 0.25W , MF | |
| | R.....36 | 57.11.4332 | 3.3 K | 2%, 0.25W , MF | |
| | R.....37 | 57.11.4103 | 10 K | 2%, 0.25W , MF | |
| | R.....38 | 57.11.4332 | 3.3 K | 2%, 0.25W , MF | |
| | R.....39 | 57.11.4332 | 3.3 K | 2%, 0.25W , MF | |
| | R.....40 | 57.11.4332 | 3.3 K | 2%, 0.25W , MF | |
| | R.....41 | 57.11.4332 | 3.3 K | 2%, 0.25W , MF | |
| | R.....42 | 57.11.4332 | 3.3 K | 2%, 0.25W , MF | |
| | R.....43 | 57.11.4332 | 3.3 K | 2%, 0.25W , MF | |
| | R.....44 | 57.11.4332 | 3.3 K | 2%, 0.25W , MF | |
| | R.....45 | 57.11.4332 | 3.3 K | 2%, 0.25W , MF | |
| | R.....46 | 57.11.4332 | 3.3 K | 2%, 0.25W , MF | |
| | R.....47 | 57.11.4332 | 3.3 K | 2%, 0.25W , MF | |
| | R.....48 | 57.11.4332 | 3.3 K | 2%, 0.25W , MF | |



| IND. | POS.NO. | PART NO. | VALUE | SPECIFICATIONS / EQUIVALENT | MANUF. |
|---|---|---|---|---|---|
| | R.....49 | 57.11.4332 | 3.3 K | 2%, 0.25W , MF | |
| | R.....50 | 57.11.4332 | 3.3 K | 2%, 0.25W , MF | |
| | R.....51 | 57.11.4471 | 470 | 2%, 0.25W , MF | |
| | R.....52 | 57.11.4680 | 68 | 2%, 0.25W , MF | |
| | R.....56 | 57.11.4150 | 15 | 2%, 0.25W , MF | |
| | R.....57 | 57.11.4150 | 15 | 2%, 0.25W , MF | |
| | R.....58 | 57.11.4471 | 470 | 2%, 0.25W , MF | |
| | R.....59 | 57.11.4471 | 470 | 2%, 0.25W , MF | |
| | R.....60 | 57.11.4820 | 82 | 2%, 0.25W , MF | |
| | R.....65 | 57.11.4123 | 12 K | 2%, 0.25W , MF | |
| | R.....66 | 57.11.3361 | 360 | 2%, 0.25W , MF | |
| | R.....67 | 58.02.4102 | 1 K | 20%, 0.1 W , Trimm-Pot. | |
| | R.....69 | 57.11.4472 | 4.7 K | 2%, 0.25W , MF | |
| | R.....70 | 58.02.4473 | 47 K | 20%, 0.1 W , Trimm-Pot. | |
| (00) | R.....71 | 57.11.4563 | 56 K | 2%, 0.25W , MF | |
| (01) | R.....71 | 57.11.3623 | 62 K | 1%, 0.25W , MF | |
| | R.....77 | 57.11.4332 | 3.3 K | 2%, 0.25W , MF | |
| (00) | R.....78 | 57.11.4332 | 3.3 K | 2%, 0.25W , MF | |
| (02) | R.....78 | 57.11.4182 | 1.8 K | 2%, 0.25W , MF | |
| | R.....79 | 57.11.3752 | 7.5 K | 2%, 0.25W , MF | |
| (00) | R.....80 | 57.11.4393 | 39 K | 2%, 0.25W , MF | |
| (01) | R.....80 | | | | |
| | R.....81 | 57.11.4221 | 220 | 2%, 0.25W , MF | |
| | R.....82 | 57.11.4221 | 220 | 2%, 0.25W , MF | |
| | R.....83 | 57.11.4821 | 820 | 2%, 0.25W , MF | |
| | R.....84 | 57.11.4181 | 180 | 2%, 0.25W , MF | |
| | R.....86 | 57.11.4332 | 3.3 K | 2%, 0.25W , MF | |
| | R.....92 | 57.11.4332 | 3.3 K | 2%, 0.25W , MF | |
| | R.....93 | 57.11.4332 | 3.3 K | 2%, 0.25W , MF | |
| | R.....94 | 57.11.4333 | 33 K | 2%, 0.25W , MF | |
| | R.....95 | 57.11.4222 | 2.2 K | 2%, 0.25W , MF | |
| | R.....96 | 57.11.4124 | 120 K | 2%, 0.25W , MF | |
| | R.....97 | 57.11.4159 | 1.5 | 2%, 0.25W , MF | |
| | R.....98 | 57.11.4563 | 56 K | 2%, 0.25W , MF | |
| | R.....99 | 57.11.4159 | 1.5 | 2%, 0.25W , MF | |
| | RP....1 | 57.99.0255 | LDR | 57K @10 Lux, 7K @100 Lux A9060 13 Hei | |



| IND. | POS.NO. | PART NO. | VALUE | SPECIFICATIONS / EQUIVALENT | MANUF. |
|---|---|---|---|---|---|
| | RZ....1 | 57.88.4104 | 8*100K | Resistor array | |
| | W.....1 | 1.010.323.64 | 7.5mm | Wire 0.6 mm diam. | |
| (00) | W.....3 | 1.010.323.64 | 7.5mm | Wire 0.6 mm diam. | |
| (01) | W.....3 | | | | |
| | W.....4 | 1.010.321.64 | 5 mm | Wire 0.6 mm diam. | |
| | XIC...2 | 53.03.0173 | 28 Pin | IC-Socket | |
| | XIC...12 | 53.03.0166 | 8 Pin | IC-Socket | |
| | Y.....1 | 89.01.0553 | SRX28595 | 4.9152MHz 100ppm/Gr.C/TD18/NMP049 | Ny/SaR |

CER=CERAMIC
EL=ELECTROLYTIC
MF=METALFILM
PETP= POLYESTER
MANUFACTURER:
Fu= Futaba, Mot= Motorola
GI= General Instrument, Hei=Heimann, ITT= Intermetall,
NEC= Nippon Electric Corp, Ny= Nymph, Ph= Philips & Valvo
SaR= SaRonix, Suw= Suwa Seykosa, Sty= Stanley,
STU=Studer, TI= Texas Instrument

(0) 15.04.87 Original
(1) 29.04.88 Update Nr.2
(2) 29.02.88 Update Nr.1

DRIG 87/12/18 (01) 88/04/29 (02) 88/02/29

## MICROCOMPUTER BOARD 1.725.296.20 B150

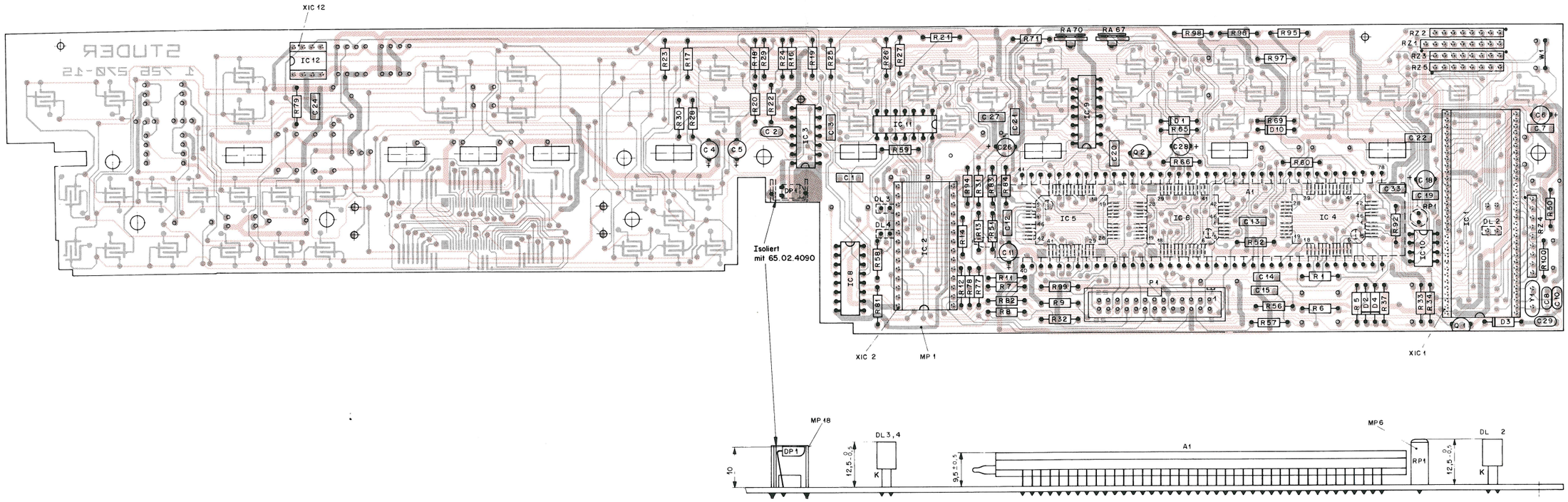


| IND. | POS.NO. | PART NO. | VALUE | SPECIFICATIONS / EQUIVALENT | MANUF. |
|---|---|---|---|---|---|
| | A....1 | 73.01.0202 | FIP | 20SDo1 20 Digit Display | NEC,FU |
| | C....1 | 59.06.0103 | 10 nF | 10%, 63V , PETP | |
| | C....2 | 59.32.2122 | 1.2 nF | 10%, 20V , CER | |
| | C....3 | 59.06.0103 | 10 nF | 10%, 63V , PETP | |
| | C....4 | 59.22.5220 | 22 uF | -20%, 25V , EL | |
| | C....5 | 59.22.8229 | 2.2 uF | -20%, 25V , EL | |
| | C....6 | 59.22.3101 | 100 uF | -20%, 10V , EL | |
| | C....7 | 59.06.0104 | 100 nF | 10%, 63V , PETP | |
| | C....8 | 59.34.2220 | 22 pF | 10%, 40V , CER | |
| | C....10 | 59.34.2220 | 22 pF | 10%, 40V , CER | |
| | C....11 | 59.22.3101 | 100 uF | -20%, 10V , EL | |
| | C....12 | 59.06.0104 | 100 nF | 10%, 63V , PETP | |
| | C....13 | 59.06.0104 | 100 nF | 10%, 63V , PETP | |
| | C....14 | 59.06.0104 | 100 nF | 10%, 63V , PETP | |
| | C....15 | 59.06.0104 | 100 nF | 10%, 63V , PETP | |
| | C....18 | 59.22.6100 | 10 uF | -20%, 10V , EL | |
| | C....19 | 59.06.0104 | 100 nF | 10%, 63V , PETP | |
| | C....20 | 59.06.0472 | 4.7 nF | 10%, 63V , PETP | |
| | C....21 | 59.06.5472 | 4.7 nF | 5%, 63V , PETP | |
| | C....22 | 59.06.0104 | 100 nF | 10%, 63V , PETP | |
| | C....24 | 59.06.0332 | 3.3 nF | 10%, 63V , PETP | |
| | C....26 | 59.22.3101 | 100 uF | -20%, 63V , EL | |
| | C....27 | 59.06.0104 | 100 nF | 10%, 63V , PETP | |
| | C....28 | 59.22.6100 | 10 uF | -20%, 25V , EL | |
| | C....29 | 59.34.2220 | 22 pF | 10%, 40V , CER | |
| | C....33 | 59.06.0104 | 100 nF | 10%, 63V , PETP | |
| | D.....1 | 50.04.0125 | 1N 4448 | | Any |
| | D.....2 | 50.04.0125 | 1N 4448 | | Any |
| | D.....3 | 50.04.0125 | 1N 4448 | | Any |
| | D.....4 | 50.04.0125 | 1N 4448 | | Any |
| | D....10 | 50.04.0125 | 1N 4448 | | Any |
| | DL....2 | 50.04.2701 | LED | red SPR5551 REC / MV57123 | STA/GI |
| | DL....3 | 50.04.2702 | LED | yellow SPY5551 REC / MV53123 | STA/GI |
| | DL....4 | 50.04.2702 | LED | yellow SPY5551 REC / MV53123 | STA/GI |



| IND. | POS.NO. | PART NO. | VALUE | SPECIFICATIONS / EQUIVALENT | MANUF. |
|---|---|---|---|---|---|
| | DP....1 | 50.04.2136 | BPW 50 | | PH |
| | IC....1 | 1.726.273.20 | uP | I/O Processor 63A01Y CMOS | STU |
| | IC....2 | 1.725.295.05 | uP | Micro controller PCF84C80 B250-E | STU |
| | IC....3 | 50.11.0121 | TBA2800 | IR Detector | ITT |
| | IC....4 | 50.62.0001 | SED2020 | FoA FIP-Driver | SE |
| | IC....5 | 50.62.0001 | SED2020 | FoA FIP-Driver | SE |
| | IC....6 | 50.62.0001 | SED2020 | FoA FIP-Driver | SE |
| | IC....8 | 50.17.1595 | 74HC595 | 8Bit Shift reg. with output latch | DIV |
| | IC....9 | 50.07.1538 | 4538 | Dual Monoflop CMOS | Ph,Mot |
| | IC....10 | 50.11.0122 | TL7705 | Reset Generator | TI |
| | IC....11 | 50.17.1004 | 74HC04 | Hex Inverter | DIV |
| | IC....12 | 1.725.292.00 | PCD8572 | 1 kBit EEPROM B150 Programmed | STU |
| | MP....1 | 1.726.270.15 | 1 PCS | MICROCOMPUTER PCB | STU |
| | MP....6 | 1.726.270.03 | 1 PCS | Tube | STU |
| | MP...18 | 1.726.270.09 | 1 PCS | IR-Reflektor | STU |
| | P.....1 | 54.14.2003 | 26 Pin | Connector for Ribbon-Cable | |
| | Q.....1 | 50.03.0436 | BC237 | NPN Small signal | Any |
| | Q.....2 | 50.03.0515 | BC307 | PNP Small signal | Any |
| | R.....1 | 57.11.3102 | 1 K | 2%, 0.25W , MF | |
| | R.....5 | 57.11.3222 | 2.2 K | 2%, 0.25W , MF | |
| | R....6 | 57.11.3102 | 1 K | 2%, 0.25W , MF | |
| | R....7 | 57.11.3332 | 3.3 K | 2%, 0.25W , MF | |
| | R....8 | 57.11.3332 | 3.3 K | 2%, 0.25W , MF | |
| | R....9 | 57.11.3471 | 470 | 2%, 0.25W , MF | |
| | R....11 | 57.11.3471 | 470 | 2%, 0.25W , MF | |
| | R....12 | 57.11.3471 | 470 | 2%, 0.25W , MF | |
| | R....13 | 57.11.3471 | 470 | 2%, 0.25W , MF | |
| | R....14 | 57.11.3181 | 180 | 2%, 0.25W , MF | |
| | R....16 | 57.11.3363 | 36 K | 1%, 0.25W , MF | |
| | R....17 | 57.11.3183 | 18 K | 1%, 0.25W , MF | |
| | R....18 | 57.11.3183 | 18 K | 1%, 0.25W , MF | |
| | R....19 | 57.11.3183 | 18 K | 1%, 0.25W , MF | |



| IND. | POS.NO. | PART NO. | VALUE | SPECIFICATIONS / EQUIVALENT | MANUF. |
|---|---|---|---|---|---|
| | R....20 | 57.11.3183 | 18 K | 1%, 0.25W , MF | |
| | R....21 | 57.11.3183 | 18 K | 1%, 0.25W , MF | |
| | R....22 | 57.11.3363 | 36 K | 1%, 0.25W , MF | |
| | R....23 | 57.11.3363 | 36 K | 1%, 0.25W , MF | |
| | R....24 | 57.11.3363 | 36 K | 1%, 0.25W , MF | |
| | R....25 | 57.11.3363 | 36 K | 1%, 0.25W , MF | |
| | R....26 | 57.11.3363 | 36 K | 1%, 0.25W , MF | |
| | R....27 | 57.11.3363 | 36 K | 1%, 0.25W , MF | |
| | R....28 | 57.11.3221 | 220 | 2%, 0.25W , MF | |
| | R....29 | 57.11.3102 | 1 K | 2%, 0.25W , MF | |
| | R....30 | 57.11.3472 | 4.7 K | 2%, 0.25W , MF | |
| | R....31 | 57.11.3181 | 180 | 2%, 0.25W , MF | |
| | R....32 | 57.11.3472 | 4.7 K | 2%, 0.25W , MF | |
| | R....33 | 57.11.3821 | 820 | 2%, 0.25W , MF | |
| | R....34 | 57.11.3104 | 100 K | 2%, 0.25W , MF | |
| | R....37 | 57.11.3103 | 10 K | 2%, 0.25W , MF | |
| | R....50 | 57.11.3332 | 3.3 K | 2%, 0.25W , MF | |
| | R....51 | 57.11.3471 | 470 | 2%, 0.25W , MF | |
| | R....52 | 57.11.3680 | 68 | 2%, 0.25W , MF | |
| | R....56 | 57.11.3150 | 15 | 2%, 0.25W , MF | |
| | R....57 | 57.11.3150 | 15 | 2%, 0.25W , MF | |
| | R....58 | 57.11.3471 | 470 | 2%, 0.25W , MF | |
| | R....59 | 57.11.3471 | 470 | 2%, 0.25W , MF | |
| | R....60 | 57.11.3820 | 82 | 2%, 0.25W , MF | |
| | R....65 | 57.11.3123 | 12 K | 2%, 0.25W , MF | |
| | R....66 | 57.11.3361 | 360 | 2%, 0.25W , MF | |
| | R....67 | 58.02.4102 | 1 K | 20%, 0.1 W , Trimm-Pot. | |
| | R....69 | 57.11.3472 | 4.7 K | 2%, 0.25W , MF | |
| | R....70 | 58.02.4473 | 47 K | 20%, 0.1 W , Trimm-Pot. | |
| | R....71 | 57.11.3623 | 62 K | 1%, 0.25W , MF | |
| | R....77 | 57.11.3332 | 3.3 K | 2%, 0.25W , MF | |
| | R....78 | 57.11.3182 | 1.8 K | 2%, 0.25W , MF | |
| | R....79 | 57.11.3752 | 7.5 K | 2%, 0.25W , MF | |
| | R....81 | 57.11.3221 | 220 | 2%, 0.25W , MF | |
| | R....82 | 57.11.3221 | 220 | 2%, 0.25W , MF | |
| | R....83 | 57.11.3821 | 820 | 2%, 0.25W , MF | |
| | R....84 | 57.11.3181 | 180 | 2%, 0.25W , MF | |



| IND. | POS.NO. | PART NO. | VALUE | SPECIFICATIONS / EQUIVALENT | MANUF. |
|---|---|---|---|---|---|
| | R....92 | 57.11.3332 | 3.3 K | 2%, 0.25W , MF | |
| | R....94 | 57.11.3333 | 33 K | 2%, 0.25W , MF | |
| | R....95 | 57.11.3222 | 2.2 K | 2%, 0.25W , MF | |
| | R....96 | 57.11.3124 | 120 K | 2%, 0.25W , MF | |
| | R....97 | 57.11.3159 | 1.5 | 2%, 0.25W , MF | |
| | R....98 | 57.11.3563 | 56 K | 2%, 0.25W , MF | |
| | R....99 | 57.11.3159 | 1.5 | 2%, 0.25W , MF | |
| | R...100 | 57.11.3332 | 3.3 K | 2%, 0.25W , MF | |
| | RP....1 | 57.99.0255 | LDR | 57K @10 Lux, 7K @100 Lux A9060 13 | Hei |
| | RZ....1 | 57.88.4104 | 8*100K | Resistor array | |
| | RZ....2 | 57.88.2332 | 4*3.3K | Resistor array | |
| | RZ....3 | 57.88.2332 | 4*3.3K | Resistor array | |
| | RZ....4 | 57.88.4104 | 8*100K | Resistor array | |
| | RZ....5 | 57.88.2332 | 4*3.3K | Resistor array | |
| | W.....1 | 1.010.323.64 | 7.5mm | Wire 0.6 mm diam. | |
| | XIC...1 | 53.03.0364 | 64 Pin | IC-Socket | |
| | XIC...2 | 53.03.0173 | 28 Pin | IC-Socket | |
| | XIC..12 | 53.03.0166 | 8 Pin | IC-Socket | |
| | Y.....1 | 89.01.0560 | SRX28595 | 4.9152MHz 100ppm/Gr.C/TD18/NMP049 | Ny/SaR |

CER=CERAMIC
EL=ELECTROLYTIC
MF=METALFILM
PETP= POLYESTER
MANUFACTURER:
Fu= Futaba, Mot= Motorola
GI= General Instrument, Hei=Heimann, ITT= Internetall,
NEC= Nippon Electric Corp, Ny= Nymph, Ph= Philips & Valvo
SaR= SaRonix, Suw= Suwa Seykosa, Sty= Stanley,
STU=Studer, TI= Texas Instrument

ORIG 89/02/13

# 6. ERSATZ-TEILE / SPARE PARTS / PIECE DE RECHANGE

## B250

| | QTY | ORDER NUMBER | PART NAME SPECIFICATION |
|---|---|---|---|
| 1 | 1 | 1.725.010.01 | Top cover plate |
| | 8 | 21.26.0354 | Phillips head screw M3x6 |
| | 1 | 20.24.7355 | Pan head tread rolling screw D3x8 |
| 2 | 1 | 1.726.010.04 | Side panels left and right |
| | 4 | 1.010.046.21 | Phillips head screw M4x12 |
| 3 | 4 | 31.02.0209 | Equipment foot |
| 4 | 1 | 1.725.105.00 | Front part complete |
| | 1 | 1.725.100.26 | Front panel (Al profile) |
| | 1 | 1.725.100.34 | Designation plate right |
| | 1 | 1.725.100.35 | Designation plate left |
| | 1 | 1.726.100.32 | Base stripe |
| | 2 | 1.726.100.33 | Style stripe |
| | 1 | 54.24.0101 | Jack socket phones |
| 5 | 2 | 1.726.100.36 | Glass plate |
| | 1 | 1.726.100.38 | Frame (left glass) |
| | 2 | 1.726.100.72 | Bolt long (left glass) |
| | 2 | 1.726.100.73 | Bolt short (right) |
| | 4 | 1.726.100.44 | Rubber ring |
| | 4 | 24.99.0114 | Shaft lock D5 |
| 6 | 1 | 1.725.100.22 | Operating chassis |
| | 8 | 21.26.0354 | Philips head screw M3x6 |
| | 1 | 1.726.100.40 | Swivel carrier (right glass) |
| | 1 | 1.726.100.45 | Axle left |
| | 1 | 1.726.100.50 | Pinion (axle right) |
| | 1 | 1.726.100.51 | Silicon damped wheel |
| | 1 | 1.726.100.52 | Spring |
| | 1 | 1.726.100.53 | Damping case cover |
| | 1 | 31.99.0141 | Rubber seal D28.5x1 |
| | 3 | 20.24.7204 | Phillips head screw D2.2x6 |
| 7a | 1 | 1.726.100.64 | Conductive rubber mat 1 |
| b | 1 | 1.726.100.65 | Conductive rubber mat 2 |
| c | 1 | 1.726.100.66 | Conductive rubber mat 3 |
| d | 1 | 1.726.100.67 | Conductive rubber mat 4 |
| e | 1 | 1.726.100.68 | Conductive rubber mat 5 |
| f | 1 | 1.726.100.69 | Conductive rubber mat 6 |
| 8 | 1 | 1.725.100.25 | LCD-Display |
| | 2 | 1.726.100.58 | LCD-Connector |
| 9 | 5 | 1.769.100.09 | Push button 17.5 |
| 10 | 2 | 1.726.100.26 | Push button 74 |
| 11 | 4 | 1.726.100.28 | Black push button large |
| 12 | 14 | 1.726.100.29 | Black push button small |
| 13 | 4 | 1.726.100.27 | Push button 21 |
| 14 | 1 | 1.726.100.47 | Lid pushbutton |
| | 1 | 1.725.100.38 | Pushbutton guide (Jack socket cover) |
| | 1 | 1.726.100.46 | Rubber ring |
| | 1 | 1.010.203.37 | pressure spring 5x20 |
| 15 | 1 | 1.725.200.81 | Mains transformer |
| | 6 | 22.99.0117 | Square nut M5 |
| | 2 | 21.26.2511 | Philips head screw M5x22 |
| | 4 | 21.26.2521 | Philips head screw M5x14 |
| | 2 | 1.725.100.43 | Spacer long |
| | 4 | 1.780.110.02 | Spacer |
| | 6 | 1.780.110.03 | Washer |
| | 6 | 1.780.110.01 | Rubber bush |
| 16 | 1 | 54.04.0103 | mains socket |
| | 2 | 21.26.2353 | Phillips head screw M3x5 |
| 17 | 1 | 1.725.100.06 | Housing LS-Clamps |
| | 8 | 22.13.8040 | Hex nut M4 |
| | 8 | 23.01.3043 | Flat washer |
| | 4 | 1.725.010.09 | Cap black |
| | 4 | 1.725.010.10 | Cap red |
| | 8 | 1.725.102.00 | Speaker clamp |
| 18 | 1 | 1.725.100.05 | Cover audio sockets |

## B250-S

| | QTY | ORDER NUMBER | PART NAME SPECIFICATION |
|---|---|---|---|
| 1 | 1 | 1.725.012.01 | Top cover plate |
| | 8 | 21.26.0354 | Phillips head screw M3x6 |
| | 1 | 20.24.7355 | Pan head tread rolling screw D3x8 |
| 2 | 2 | 1.726.010.06 | Side panels left and right |
| | 4 | 1.010.046.21 | Phillips head screw M4x12 |
| 3 | 3 | 1.726.022.00 | Foot golden |
| | 1 | 1.726.022.02 | Foot special golden |
| 4 | 1 | 1.725.109.00 | Front part complete |
| | 1 | 1.725.103.21 | Designation plate right |
| | 1 | 1.725.103.20 | Designation plate left |
| | 1 | 1.726.103.32 | Base stripe |
| | 2 | 1.726.103.33 | Style stripe |
| | 1 | 54.24.0101 | Jack socket phones |
| 5 | 2 | 1.726.100.36 | Glass plate |
| | 1 | 1.726.100.38 | Frame (left glass) |
| | 2 | 1.726.100.72 | Bolt long (left glass) |
| | 2 | 1.726.100.73 | Bolt short (right) |
| | 4 | 1.726.100.44 | Rubber ring |
| | 4 | 24.99.0114 | Shaft lock D5 |

B250-S (continued)

| | QTY | ORDER NUMBER | PART NAME | SPECIFICATION |
|---|---|---|---|---|
| 6 | 1 | 1.725.100.22 | Operating chassis | |
| | 8 | 21.26.0354 | Philips head screw | M3x6 |
| | 1 | 1.726.100.40 | Swivel carrier (right glass) | |
| | 1 | 1.726.100.45 | Axle left | |
| | 1 | 1.726.100.50 | Pinion (axle right) | |
| | 1 | 1.726.100.51 | Silicon damped wheel | |
| | 1 | 1.726.100.52 | Spring | |
| | 1 | 1.726.100.53 | Damping case cover | |
| | 1 | 31.99.0141 | Rubber seal | D28.5x1 |
| | 3 | 20.24.7204 | Phillips head screw | D2.2x6 |
| 7a | 1 | 1.726.100.64 | Conductive rubber mat 1 | |
| b | 1 | 1.726.100.65 | Conductive rubber mat 2 | |
| c | 1 | 1.726.100.66 | Conductive rubber mat 3 | |
| d | 1 | 1.726.100.67 | Conductive rubber mat 4 | |
| e | 1 | 1.726.100.68 | Conductive rubber mat 5 | |
| f | 1 | 1.726.100.69 | Conductive rubber mat 6 | |
| 8 | 1 | 1.725.100.25 | LCD-Display | |
| | 2 | 1.726.100.58 | LCD-Connector | |
| 9 | 5 | 1.726.103.02 | Push button | 17.5 |
| 10 | 2 | 1.726.103.05 | Push button | 74 |
| 11 | 4 | 1.726.100.28 | Black push button | large |
| 12 | 14 | 1.726.100.29 | Black push button | small |
| 13 | 4 | 1.726.103.04 | Push button | 21 |
| 14 | 1 | 1.726.100.47 | Lid pushbutton | |
| | 1 | 1.725.100.38 | Pushbutton guide (Jack socket cover) | |
| | 1 | 1.726.100.46 | Rubber ring | |
| | 1 | 1.010.203.37 | pressure spring | 5x20 |
| 15 | 1 | 1.725.200.81 | Mains transformer | |
| | 6 | 22.99.0117 | Square nut | M5 |
| | 2 | 21.26.2511 | Philips head screw | M5x22 |
| | 4 | 21.26.2521 | Philips head screw | M5x14 |
| | 2 | 1.725.100.43 | Spacer long | |
| | 4 | 1.780.110.02 | Spacer | |
| | 6 | 1.780.110.03 | Washer | |
| | 6 | 1.780.110.01 | Rubber bush | |
| 16 | 1 | 54.04.0103 | mains socket | |
| | 2 | 21.26.2353 | Phillips head screw | M3x5 |
| 17 | 1 | 1.725.100.06 | Housing LS-Clamps | |
| | 8 | 22.13.8040 | Hex nut | M4 |
| | 8 | 23.01.3043 | Flat washer | |
| | 4 | 1.725.010.09 | Cap black | |
| | 4 | 1.725.010.10 | Cap red | |
| | 8 | 1.725.102.00 | Speaker clamp | |
| 18 | 1 | 1.725.100.05 | Cover audio sockets | |

B150

| | QTY | ORDER NUMBER | PART NAME | SPECIFICATION |
|---|---|---|---|---|
| 1 | 1 | 1.725.015.01 | Top cover plate | |
| | 8 | 21.26.0354 | Phillips head screw | M3x6 |
| | 1 | 20.24.7355 | Pan head tread rolling screw | D3x8 |
| 2 | 1 | 1.726.010.04 | Side panels left and right | |
| | 4 | 1.010.027.21 | Phillips head screw | M4x12 |
| 3 | 4 | 31.02.0209 | Equipment foot | |
| 4 | 1 | 1.725.107.00 | Front part complete | |
| | 1 | 1.725.106.05 | Designation plate | |
| | 1 | 1.726.106.08 | Base stripe | |
| | 2 | 1.726.106.10 | Style stripe | |
| | 1 | 54.24.0101 | Jack socket phones | |
| 6 | 1 | 1.725.106.07 | Operating chassis | |
| | 8 | 21.26.0354 | Philips head screw | M3x6 |
| | 1 | 1.726.100.45 | Axle left | |
| 7a | 1 | 1.726.100.64 | Conductive rubber mat 1 | |
| b | 1 | 1.726.100.65 | Conductive rubber mat 2 | |
| c | 1 | 1.726.100.66 | Conductive rubber mat 3 | |
| d | 1 | 1.726.100.67 | Conductive rubber mat 4 | |
| e | 1 | 1.726.100.68 | Conductive rubber mat 5 | |
| f | 1 | 1.726.100.69 | Conductive rubber mat 6 | |
| 9 | 5 | 1.769.100.09 | Push button | 17.5 |
| 10 | 2 | 1.726.100.26 | Push button | 74 |
| 11 | 4 | 1.726.100.28 | Black push button | large |
| 12 | 6 | 1.726.100.29 | Black push button | small |
| 13 | 4 | 1.726.100.27 | Push button | 21 |
| 15 | 1 | 1.725.205.81 | Mains transformer | 220V |
| | 1 | 1.725.206.81 | Mains transformer | 110V |
| | 1 | 1.725.207.81 | Mains transformer | 240V |
| | 6 | 22.99.0117 | Square nut | M5 |
| | 2 | 21.26.2511 | Philips head screw | M5x22 |
| | 4 | 21.26.2521 | Philips head screw | M5x14 |
| | 2 | 1.725.100.43 | Spacer long | |
| | 4 | 1.780.110.02 | Spacer | |
| | 6 | 1.780.110.03 | Washer | |
| | 6 | 1.780.110.01 | Rubber bush | |
| | 1 | 1.067.307.00 | Power cable | EUR |
| | 1 | 1.067.308.00 | Power cable | USA |
| 17 | 1 | 1.725.100.06 | Housing LS-Clamps | |
| | 8 | 22.13.8040 | Hex nut | M4 |
| | 8 | 23.01.3043 | Flat washer | |
| | 4 | 1.725.010.09 | Cap black | |
| | 4 | 1.725.010.10 | Cap red | |
| | 8 | 1.725.102.00 | Speaker clamp | |
| 18 | 1 | 1.725.100.05 | Cover audio sockets | |

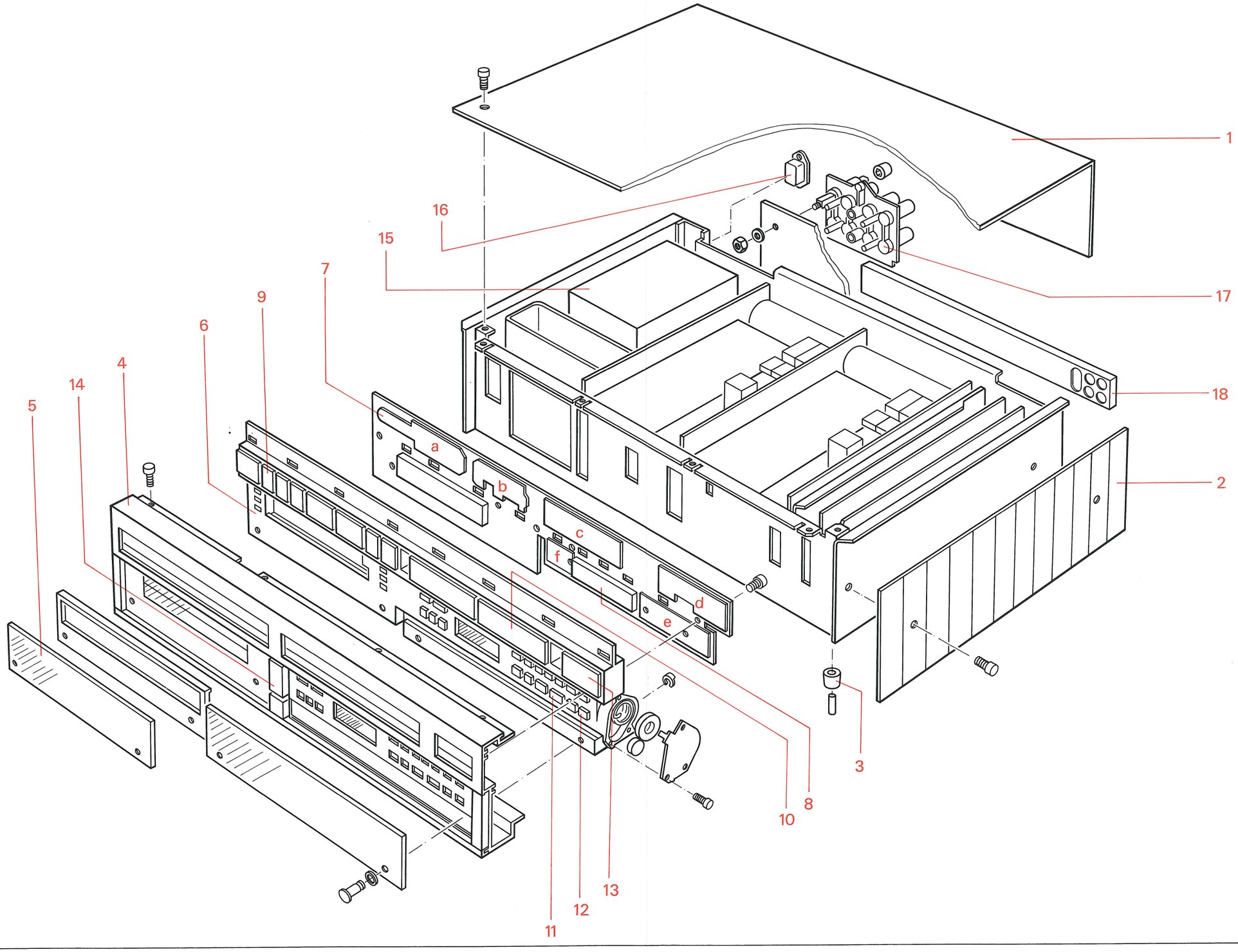
1
16
15
7
9
6
4
14
5
17
18
2
a
b
c
f
d
e
3
10
8
13
12
11

## 7. TECHNISCHE DATEN B250/B250–S
## TECHNICAL DATA B250/B250–S
## CARACTERISTIQUES TECHNIQUES B250/B250–S

| | | |
|---|---|---|
| **Spitzenleistung:** | an 4 Ohm: | 2 x 300 W |
| | an 8 Ohm: | 2 x 160 W |
| | 1 kHZ-Signal; 1 Periode ein, 16 Perioden aus | |
| **Sinusleistung** (DIN 45500): | an 4 Ohm: | 2 x 200 W |
| | an 8 Ohm: | 2 x 120 W |
| **Dämpfungsfaktor:** | bei 1 kHz an 8 Ohm: | >100 |
| **Harmonische Verzerrungen:** | bei 1 kHz 180 W an 4 Ohm: | <0,006 % |
| **Anstiegszeit:** | bei 4 Ohm Last: | 4 µs |
| | bei 8 Ohm Last: | 3 µs |
| **Eingänge** | | |
| Empfindlichkeit/Impedanz: | (für 1 kHz bei 200 W an 4 Ohm) | |
| – TUNER, TAPE 1, TAPE 2, AUX, CD: | 250 mV/47 kOhm, nominell 500 mV | |
| – PHONO MM: | 2,5 mV/47 kOhm; 50, 150, 450 pF; nominell 5 mV | |
| – PHONO MC (Option): | 140 µV/100 Ohm, nominell 0,5 mV | |
| – PWR–AMP: | 2,8 V/47 kOhm | |
| **Ausgänge** | | |
| Pegel/Impedanz: | (bei nomineller Eingangsspannung) | |
| – REC, MONITOR, TAPE 1, TAPE 2: | | 500 mV/440 Ohm |
| – ab Eingang PHONO MM: | | 250 mV |
| – PRE–AMP: | | 2,8 V/440 Ohm |
| – PHONES: | | 9,8 V/280 Ohm |
| – SPEAKERS A/B: | | 28,3 V/80 mOhm |
| **Klangregler:** | (parametrisch in ±4 Stufen) | |
| | BASS bei 40 Hz: | –12 dB ... +12 dB |
| | TREBLE bei 14 kHz: | –12 dB ... +12 dB |
| **Fremdspannungsabstand:** | (bei nomineller Eingangsspannung) | |
| – TUNER, TAPE 1, TAPE 2, AUX, CD: | bei 200 W an 4 Ohm, 1 kOhm Abschluss: | 98 dB |
| | bei 50mW an 4 Ohm, 1 kOhm Abschluss: | 76 dB |
| – PHONO MM: | bei 200 W an 4 Ohm, 1 kOhm Abschluss: | 76 dB |
| | bei 50mW an 4 Ohm, 1 kOhm Abschluss: | 75 dB |
| – PHONO MC (Option): | bei 200 W an 4 Ohm, 1 kOhm Abschluss: | 73 dB |
| | bei 50mW an 4 Ohm, 1 kOhm Abschluss: | 70 dB |
| **Maximale Eingangsspannung:** | TUNER, TAPE 1, TAPE 2, AUX, CD: | 10 V |
| | PHONO MM: | 200 mV |
| | PHONO MC (Option): | 10 mV |
| **Übersprechen:** | | |
| – zwischen den Eingängen: | bei 10 kHz, 1 kOhm Abschluss: | 100 dB |
| – Vor-/Hinterband: | bei 10 kHz, 1 kOhm Abschluss: | 80 dB |
| **Kanaltrennung:** | | |
| – TUNER, TAPE 1, TAPE 2, AUX, CD: | bei 1 kHz, 1 kOhm Abschluss: | 86 dB |
| – PHONO: | bei 1 kHz, 1 kOhm Abschluss: | 55 dB |
| **Frequenzgang:** | 20 Hz ... 20 kHz: | +0 dB/–0,2 dB |

| | | |
|---|---|---|
| **PHONO RIAA-Entzerrung:** | 4 Zeitkonstanten, 20 Hz ... 20 kHz | ±0,3 dB |
| **Stromversorgung:** | intern einstellbar 100, 120, 140, 200, 220, 240 V AC, +5 %/–10 % 50 Hz ... 60 Hz | |
| **Netzsicherung:** | 100 V ... 140 V AC: | T 6,3 A/250 V (SLOW) |
| | 200 V ... 240 V AC: | T 3,15 A/250 V (SLOW) |
| **Leistungsaufnahme:** | maximal: | 800 W |
| | in Standby ca.: | 10 W |
| **Abmessungen:** (B x H x T): | B250: | 450 x 109 x 332 mm |
| | B250–S: | 480 x 118 x 332 mm |
| **Gewicht:** | ca.: | 15 kg |

Änderungen vorbehalten.

| | | |
|---|---|---|
| **Peak output power:** | into 4 Ohm: | 2 x 300 W |
| | into 8 Ohm: | 2 x 160 W |
| | 1 kHz signal; 1 period on, 16 periods off | |
| **Continuous power output:** (DIN 45500) | into 4 Ohm: | 2 x 200 W |
| | into 8 Ohm: | 2 x 120 W |
| **Damping factor:** | at 1 kHz into 8 Ohm: | >100 |
| **Harmonic distortion:** | at 1 kHz, 180 W into 4 Ohm: | <0.006 % |
| **Rise time:** | for 4 Ohm load: | 4 µs |
| | for 8 Ohm load: | 3 µs |
| **Inputs** | | |
| Sensitivity/impedance: | (for 1 kHz at 200 W into 4 Ohm) | |
| – TUNER, TAPE 1, TAPE 2, AUX, CD: | 250 mV/47 kOhm, nominal 500 mV | |
| – PHONO MM: | 2.5 mV/47 kOhm; 50, 150, 450 pF; nominal 5 mV | |
| – PHONO MC (option): | 140 µV/100 Ohm, nominal 0.5 mV | |
| – PWR–AMP: | 2.8 V/47 kOhm | |
| **Outputs** | | |
| Level/impedance: | (at nominal input voltage) | |
| – REC, MONITOR, TAPE 1, TAPE 2: | | 500 mV/440 Ohm |
| – from PHONO MM input: | | 250 mV |
| – PRE–AMP: | | 2.8 V/440 Ohm |
| – PHONES: | | 9.8 V/280 Ohm |
| – SPEAKERS A/B: | | 28.3 V/80 mOhm |
| **Tone control response:** | (parametric in ±4 steps) | |
| | BASS at 40 Hz: | –12 dB ... +12 dB |
| | TREBLE at 14 kHz: | –12 dB ... +12 dB |
| **Signal-to-noise-ratio:** | linear (at nominal input voltage) | |
| – TUNER, TAPE 1, TAPE 2, AUX, CD: | at 200 W into 4 Ohm, 1 kOhm termination: | 98 dB |
| | at 50mW into 4 Ohm, 1 kOhm termination: | 76 dB |
| – PHONO MM: | at 200 W into 4 Ohm, 1 kOhm termination: | 76 dB |
| | at 50mW into 4 Ohm, 1 kOhm termination: | 75 dB |
| – PHONO MC (option): | at 200 W into 4 Ohm, 1 kOhm termination: | 73 dB |
| | at 50mW into 4 Ohm, 1 kOhm termination: | 70 dB |
| **Maximum input voltage:** | TUNER, TAPE 1, TAPE 2, AUX, CD: | 10 V |
| | PHONO MM: | 200 mV |
| | PHONO MC (option): | 10 mV |
| **Crosstalk attenuation:** | | |
| – Between inputs: | at 10 kHz, 1 kOhm termination: | 100 dB |
| – Tape/source: | at 10 kHz, 1 kOhm termination: | 80 dB |
| **Channel separation:** | | |
| – TUNER, TAPE 1, TAPE 2, AUX, CD: | at 1 kHz, 1 kOhm termination: | 86 dB |
| – PHONO: | at 1 kHz, 1 kOhm termination: | 55 dB |
| **Frequency response:** | 20 Hz ... 20 kHz: | +0 dB/–0.2 dB |

| | | |
|---|---|---|
| **PHONO RIAA equalization:** | 4 times constants, 20 Hz ... 20 kHz | ±0.3 dB |
| **Power requirements:** | internally adjustable 100, 120, 140, 200, 220, 240 V AC, +5 %/–10 % 50 Hz ... 60 Hz | |
| **Power fuse:** | 100 V ... 140 V AC: | T 6.3 A/250 V (SLOW) |
| | 200 V ... 240 V AC: | T 3.15 A/250 V (SLOW) |
| **Power consumption:** | maximum: | 800 W |
| | in standby, approx.: | 10 W |
| **Dimensions** (W x H x D): | B250: | 450 x 109 x 332 mm |
| | B250–S: | 480 x 118 x 332 mm |
| **Weight:** | approx.: | 15 kg |

Subject to change.

| | | |
|---|---|---|
| **Puissance maximale:** | sur 4 Ohm: | 2 x 300 W |
| | sur 8 Ohm: | 2 x 160 W |
| | Signal 1 kHz; 1 période en, 16 périodes hors | |
| **Puissance sinus:** (DIN 45500) | sur 4 Ohm: | 2 x 200 W |
| | sur 8 Ohm: | 2 x 120 W |
| **Facteur d'affaiblissement:** | à 1 kHz sur 8 Ohm: | >100 |
| **Distorsion harmoniques:** | à 1 kHz, 180 W sur 4 Ohm: | <0,006 % |
| **Temps de montée:** | pour charge 4 Ohm: | 4 µs |
| | pour charge 8 Ohm: | 3 µs |
| **Entrées** | | |
| Sensibilité/impédance: | (pour 1 kHz à 200 W sur 4 Ohm) | |
| – TUNER, TAPE 1, TAPE 2, AUX, CD: | 250 mV/47 kOhm, nominal 500 mV | |
| – PHONO MM: | 2,5 mV/47 kOhm; 50, 150, 450 pF; nominal 5 mV | |
| – PHONO MC (option): | 140 µV/100 Ohm, nominal 0,5 mV | |
| – PWR–AMP: | 2,8 V/47 kOhm | |
| **Sorties** | | |
| Niveau/impédance: | (à tension nominale d'entrée) | |
| – REC, MONITOR, TAPE 1, TAPE 2: | | 500 mV/440 Ohm |
| – depuis entrée PHONO MM: | | 250 mV |
| – PRE–AMP: | | 2,8 V/440 Ohm |
| – PHONES: | | 9,8 V/280 Ohm |
| – SPEAKERS A/B: | | 28,3 V/80 mOhm |
| **Réglage de tonalité:** | (paramétrique par pas de ±4 niveaux) | |
| | BASS à 40 Hz: | –12 dB ... +12 dB |
| | TREBLE à 14 kHz: | –12 dB ... +12 dB |
| **Rapport signal/bruit:** | (à tension nominale d'entrée) | |
| – TUNER, TAPE 1, TAPE 2, AUX, CD: | pour 200 W à 4 Ohm, bouclage 1 kOhm: | 98 dB |
| | pour 50mW à 4 Ohm, bouclage 1 kOhm: | 76 dB |
| – PHONO MM: | pour 200 W à 4 Ohm, bouclage 1 kOhm: | 76 dB |
| | pour 50mW à 4 Ohm, bouclage 1 kOhm: | 75 dB |
| – PHONO MC (option): | pour 200 W à 4 Ohm, bouclage 1 kOhm: | 73 dB |
| | pour 50mW à 4 Ohm, bouclage 1 kOhm: | 70 dB |
| **Tensions maximale d'entrée:** | TUNER, TAPE 1, TAPE 2, AUX, CD: | 10 V |
| | PHONO MM: | 200 mV |
| | PHONO MC (option): | 10 mV |
| **Diaphonie:** | | |
| – entre les entrées: | à 10 kHz, bouclage 1 kOhm: | 100 dB |
| – avant/après-bande: | à 10 kHz, bouclage 1 kOhm: | 80 dB |
| **Séparation des canaux:** | | |
| – TUNER, TAPE 1, TAPE 2, AUX, CD: | pour 1 kHz, bouclage 1 kOhm: | 86 dB |
| – PHONO: | pour 1 kHz, bouclage 1 kOhm: | 55 dB |
| **Courbe de réponse:** | 20 Hz ... 20 kHz: | +0 dB/–0,2 dB |

| | | |
|---|---|---|
| **Correction PHONO RIAA:** | 4 constantes de temps, 20 Hz ... 20 kHz | ±0,3 dB |
| **Alimentation:** | réglable au niveau interne 100, 120, 140, 200, 220, 240 V AC, +5 %/–10 % 50 Hz ... 60 Hz | |
| **Fusible de réseau:** | 100 V ... 140 V AC: | T 6,3 A/250 V (SLOW) |
| | 200 V ... 240 V AC: | T 3,15 A/250 V (SLOW) |
| **Consommation:** | maximale: | 800 W |
| | en veille env.: | 10 W |
| **Dimensions** (L x H x P): | B250: | 450 x 109 x 332 mm |
| | B250–S: | 480 x 118 x 332 mm |
| **Poids:** | env.: | 15 kg |

Modifications réservées.

B250–S

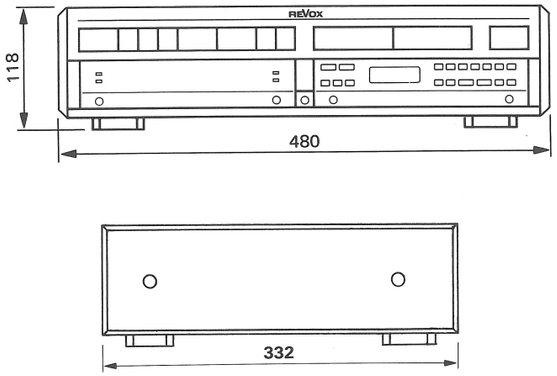

# 7. TECHNISCHE DATEN B150
# TECHNICAL DATA B150
# CARACTERISTIQUES TECHNIQUES B150

| | | |
|---|---|---|
| **Spitzenleistung:** | an 4 Ohm: | 2 x 250 W |
| | an 8 Ohm: | 2 x 130 W |
| | 1 kHZ-Signal; 1 Periode ein, 16 Perioden aus | |
| **Sinusleistung** (DIN 45500): | an 4 Ohm: | 2 x 120 W |
| | an 8 Ohm: | 2 x 90 W |
| nach IEC 65: | an 4 Ohm: | 2 x 100 W |
| **Dämpfungsfaktor:** | bei 1 kHz an 8 Ohm: | >100 |
| **Harmonische Verzerrungen:** | bei 1 kHz 110 W an 4 Ohm: | <0,006 % |
| **Anstiegszeit:** | bei 4 Ohm Last: | 4 µs |
| | bei 8 Ohm Last: | 3 µs |
| **Eingänge** | | |
| Empfindlichkeit/Impedanz: | (für 1 kHz bei 130 W an 4 Ohm) | |
| – TUNER, TAPE 1, TAPE 2, AUX, CD: | | 200 mV/47 kOhm |
| – PHONO MM: | | 2,0 mV/47 kOhm; 150 pF |
| **Ausgänge** | | |
| Pegel/Impedanz: | (bei nomineller Eingangsspannung) | |
| – REC, TAPE 1, TAPE 2: | | 500 mV/440 Ohm |
| – ab Eingang PHONO MM: | | 250 mV |
| – PHONES: | | 9,8 V/280 Ohm |
| – SPEAKERS A/B: | | 22 V/80 mOhm |
| **Klangregler:** | (parametrisch in ±4 Stufen) | |
| | BASS bei 40 Hz: | –12 dB ... +12 dB |
| | TREBLE bei 14 kHz: | –12 dB ... +12 dB |
| **Fremdspannungsabstand:** (bei nomineller Eingangsspannung) | | |
| – TUNER, TAPE 1, TAPE 2, AUX, CD: | | |
| | bei 130 W an 4 Ohm, 1 kOhm Abschluss: | 98 dB |
| | bei 50 mW an 4 Ohm, 1 kOhm Abschluss: | 76 dB |
| – PHONO MM: | bei 130 W an 4 Ohm, 1 kOhm Abschluss: | 76 dB |
| | bei 50 mW an 4 Ohm, 1 kOhm Abschluss: | 75 dB |
| **Maximale Eingangsspannung:** | TUNER, TAPE 1, TAPE 2, AUX, CD: | 10 V |
| | PHONO MM: | 200 mV |
| **Übersprechen:** | | |
| – zwischen den Eingängen: | bei 10 kHz, 1 kOhm Abschluss: | 100 dB |
| – Vor-/Hinterband: | bei 10 kHz, 1 kOhm Abschluss: | 80 dB |
| **Kanaltrennung:** | | |
| – TUNER, TAPE 1, TAPE 2, AUX, CD: | | |
| | bei 1 kHz, 1 kOhm Abschluss: | 86 dB |
| – PHONO: | bei 1 kHz, 1 kOhm Abschluss: | 55 dB |
| **Frequenzgang:** | 20 Hz ... 20 kHz: | +0 dB/–0,2 dB |

| | | |
|---|---|---|
| **PHONO RIAA-Entzerrung:** | 4 Zeitkonstanten, 20 Hz ... 20 kHz | ±0,3 dB |
| **Stromversorgung:** | 220 V AC +5/–10 % 50 ... 60 Hz, T 2,5 A<br>110 V oder 240 V Versionen ab Werk möglich | |
| **Leistungsaufnahme:** | maximal: | 500 W |
| | in Standby ca.: | 10 W |
| **Abmessungen:** | (B x H x T): | 450 x 109 x 332 mm |
| **Gewicht:** | ca.: | 13 kg |

Änderungen vorbehalten.

| | | |
|---|---|---|
| **Peak output power:** | into 4 Ω: | 2 x 250 W |
| | into 8 Ω: | 2 x 130 W |
| | 1 kHz signal; 1 period on, 16 periods off | |
| **Continuous power output** (DIN 45500): | into 4 Ω: | 2 x 120 W |
| | into 8 Ω: | 2 x 90 W |
| according to IEC 65: | into 4 Ω: | 2 x 100 W |
| **Damping factor:** | at 1 kHz into 8 Ω: | >100 |
| **Harmonic distortion:** | at 1 kHz, 110 W into 4 Ω: | <0.006% |
| **Rise time:** | with 4 Ω load: | 4 µs |
| | with 8 Ω load: | 3 µs |
| **Inputs** | | |
| Sensitivity/impedance: | (for 1 kHz at 130 W into 4 Ω) | |
| – TUNER, TAPE 1, TAPE 2, AUX, CD: | | 200 mV/47 kΩ |
| – PHONO MM: | | 2.0 mV/47 kΩ; 150 pF |
| **Outputs** | | |
| Level/impedance: | (at nominal input voltage) | |
| – REC, MONITOR, TAPE 1, TAPE 2: | | 500 mV/440 Ω |
| – from PHONO MM input: | | 250 mV |
| – PHONES: | | 9.8 V/280 Ω |
| – SPEAKERS A/B: | | 22 V/80 mΩ |
| **Tone control response:** | (parametric in ±4 steps) | |
| | BASS at 40 Hz: | –12 dB ... +12 dB |
| | TREBLE at 14 kHz: | –12 dB ... +12 dB |
| **Signal-to-noise ratio, linear:** (at nominal input voltage) | | |
| – TUNER, TAPE 1, TAPE 2, AUX, CD: | | |
| | at 130 W into 4 Ω, 1 kΩ termination: | 98 dB |
| | at 50 mW into 4 Ω, 1 kΩ termination: | 76 dB |
| – PHONO MM: | at 130 W into 4 Ω, 1 kΩ termination: | 76 dB |
| | at 50 mW into 4 Ω, 1 kΩ termination: | 75 dB |
| **Maximum input voltage:** | TUNER, TAPE 1, TAPE 2, AUX, CD: | 10 V |
| | PHONO MM: | 200 mV |
| **Crosstalk attenuation:** | | |
| – Between inputs: | at 10 kHz, 1 kΩ termination: | 100 dB |
| – Tape/source: | at 10 kHz, 1 kΩ termination: | 80 dB |
| **Channel separation:** | | |
| – TUNER, TAPE 1, TAPE 2, AUX, CD: | | |
| | at 1 kHz, 1 kΩ termination: | 86 dB |
| – PHONO: | at 1 kHz, 1 kΩ termination: | 55 dB |
| **Frequency response:** | 20 Hz ... 20 kHz: +0 dB/– 0.2 dB | |

| | | |
|---|---|---|
| **PHONO RIAA equalization:** | 4 times constants, 20 Hz ... 20 kHz | ±0.3 dB |
| **Power requirements:** | internally adjustable<br>220 VAC, +5%/–10% 50 Hz ... 60 Hz,<br>fuse: 2.5 A slow<br>110 V or 240 V versions available from the factory | |
| **Power consumption:** | maximum: | 500 W |
| | in standby, approx.: | 10 W |
| **Dimensions:** | (W x H x D): | 450 x 109 x 332 mm |
| **Weight:** | approx.: | 13 kg |

Subject to change

| | | |
|---|---|---|
| **Puissance maximale:** | sur 4 Ω: | 2 x 250 W |
| | sur 8 Ω: | 2 x 130 W |
| | Signal 1 kHz; 1 période en, 16 périodes hors | |
| **Puissance sinus** (DIN 45500): | sur 4 Ω: | 2 x 120 W |
| | sur 8 Ω: | 2 x 90 W |
| selon CEI 65: | sur 4 Ω: | 2 x 100 W |
| **Facteur d'amortissement:** | à 1 kHz sur 8 Ω: | >100 |
| **Distorsions harmoniques:** | à 1 kHz, 110 W sur 4 Ω: | <0,006% |
| **Temps de montée:** | pour charge 4 Ω: | 4 µs |
| | pour charge 8 Ω: | 3 µs |
| **Entrées** | | |
| Sensibilité/impédance: | (pour 1 kHz à 130 W sur 4 Ω) | |
| – TUNER, TAPE 1, TAPE 2, AUX, CD: | | 200 mV/47 kΩ |
| – PHONO MM: | | 2,0 mV/47 kΩ; 150 pF |
| **Sorties** | | |
| Niveau/impédance: | (à tension nominale d'entrée) | |
| – REC, MONITOR, TAPE 1, TAPE 2: | | 500 mV/440 Ω |
| – depuis entrée PHONO MM: | | 250 mV |
| – PHONES: | | 9,8 V/280 Ω |
| – SPEAKERS A/B: | | 22 V/80 mΩ |
| **Réglage de tonalité:** | (paramétrique par pas de ±4 niveaux) | |
| | BASS à 40 Hz: | –12 dB ... +12 dB |
| | TREBLE à 14 kHz: | –12 dB ... +12 dB |
| **Rapport signal/bruit:** (à tension nominale d'entrée) | | |
| – TUNER, TAPE 1, TAPE 2, AUX, CD: | | |
| | pour 130 W à 4 Ω, bouclage 1 kΩ: | 98 dB |
| | pour 50 mW à 4 Ω, bouclage 1 kΩ: | 76 dB |
| – PHONO MM: | pour 130 W à 4 Ω, bouclage 1 kΩ: | 76 dB |
| | pour 50 mW à 4 Ω, bouclage 1 kΩ: | 75 dB |
| **Tension maximale d'entrée:** | | |
| | TUNER, TAPE 1, TAPE 2, AUX, CD: | 10 V |
| | PHONO MM: | 200 mV |
| **Diaphonie:** | | |
| – entre les entrées: | à 10 kHz, bouclage 1 kΩ: | 100 dB |
| – avant/après-bande: | à 10 kHz, bouclage 1 kΩ: | 80 dB |
| **Séparation des canaux:** | | |
| – TUNER, TAPE 1, TAPE 2, AUX, CD: | | |
| | pour 1 kHz, bouclage 1 kΩ: | 86 dB |
| – PHONO: | pour 1 kHz, bouclage 1 kΩ: | 55 dB |
| **Réponse en fréquence:** | 20 Hz ... 20 kHz: | +0 dB/– 0,2 dB |

| | | |
|---|---|---|
| **Correction PHONO RIAA:** | 4 constantes de temps, 20 Hz ... 20 kHz | ±0,3 dB |
| **Alimentation:** | 220 V AC, +5%/–10% 50 Hz ... 60 Hz. T 2,5 A<br>Versions 110 V ou 240 V possibles d'usine | |
| **Consommation:** | maximale: | 500 W |
| | en veille env.: | 10 W |
| **Dimensions:** | (L x H x P): | 450 x 109 x 332 mm |
| **Poids:** | env.: | 13 kg |

Modifications réservées

B150

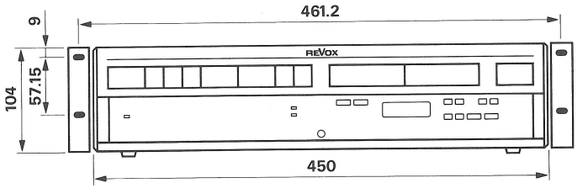


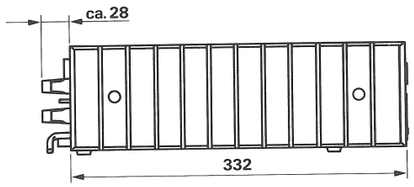

STUDER REVOX

**Manufacturer**
Willi Studer AG
CH-8105 Regensdorf/Switzerland
Althardstrasse 30

Studer Revox GmbH
D-7827 Löffingen/Germany
Talstrasse 7

**Worldwide Distribution**
Revox Ela AG
CH-8105 Regensdorf/Switzerland
Althardstrasse 146